MEDIUM HYDRAULIC PART: BRAKE FLUID
MEDIUM HYDRAULIKTEIL: BREMSFLUESSIGKEIT
FLUIDE PARTIE HYDRAULIQUE: LIQUIDE DE FREIN
FLUIDO PARTE IDRAULICA: LIQUIDO PER FRENI

WORKING PRESSURE: P_e max. = 50 bar (TEMPORARILY: P_e max. = 120 bar)
BETRIEBSDRUCK: (KURZZEITIG:
PRESSION D'UTILISATION: (DE COURTE DUREE:
PRESSIONE DI ESERCIZIO: (BREVE TEMPO SOLO:

HYDRAULIC WORKING VOLUME:
HYDRAULISCHES ARBEITSVOLUMEN:
VOLUME HYDRAULIQUE ABSORBE: ≤1.5 cm³
VOLUME IDRAULICO ASSORBITO:

RESIDUAL PRESSURE IN THE HYDRAULIC SYSTEM:
RUECKHALTEDRUCK IM HYDRAULIKSYSTEM:
PRESSION DE RETENUE AU SYSTEME HYDRAULIQUE: P_4 ≤ 0.1 bar
PRESSIONE DI RITENUTA NEL SISTEMA IDRAULICO:

MEDIUM PNEUMATIC PART: AIR
MEDIUM PNEUMATIKTEIL: LUFT
FLUIDE PARTIE PNEUMATIQUE: AIR
FLUIDO PARTE PNEUMATICA: ARIA

WORKING PRESSURE: P_e max. = 7 bar (TEMPORARILY: P_e max. = 10 bar)
BETRIEBSDRUCK: (KURZZEITIG:
PRESSION D'UTILISATION: (DE COURTE DUREE:
PRESSIONE DI ESERCIZIO: (BREVE TEMPO SOLO:

THERMAL RANGE OF APPLICATION:
THERMISCHER ANWENDUNGSBEREICH:
GAMME D'APPLICATION THERMIQUE: -40°C...+80°C
CAMPO DI APPLICAZIONE TERMICA:

INSTALLATION: VENTING SCREW MUST BE AT TOP
EINBAULAGE: ENTLUEFTUNGSSCHRAUBE MUSS NACH OBEN ZEIGEN
POSITION D'INSTALLATION: BOUCHON DE PURGE DOIT ETRE MONTE EN HAUT
POSIZIONE DI MONTAGGIO: LA VITE DI SCARICO DEVE ESSERE IN ALTO

1 SUPPLY / VORRAT / ALIMENTATION / ALIMENTAZIONE
2 OUTLET / AUSGANG / SORTIE / USCITA
Z OUTLET / AUSGANG / SORTIE / USCITA
3 EXHAUST / ENTLUEFTUNG / ECHAPPEMENT / SCARICO
4 HYDRAULIC CONTROL PRESSURE / HYDRAULISCHER STEUERDRUCK / PRESSION HYDRAULIQUE DE COMMANDE / PRESSIONE IDRAULICO DI COMANDO

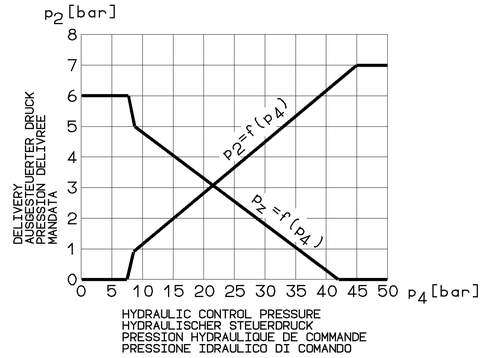

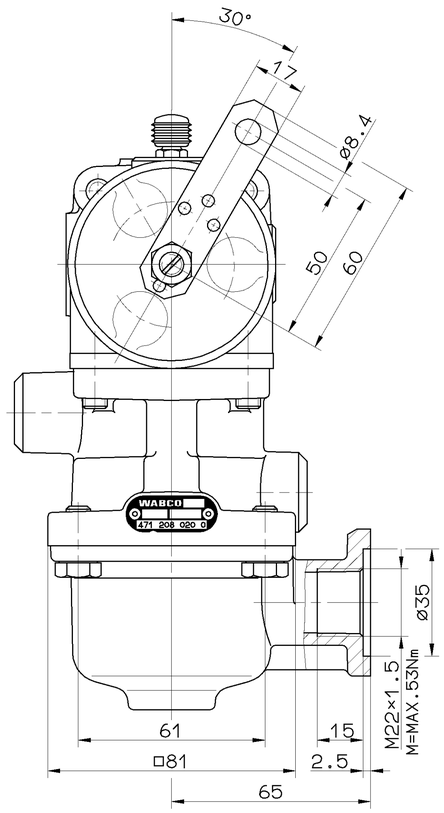

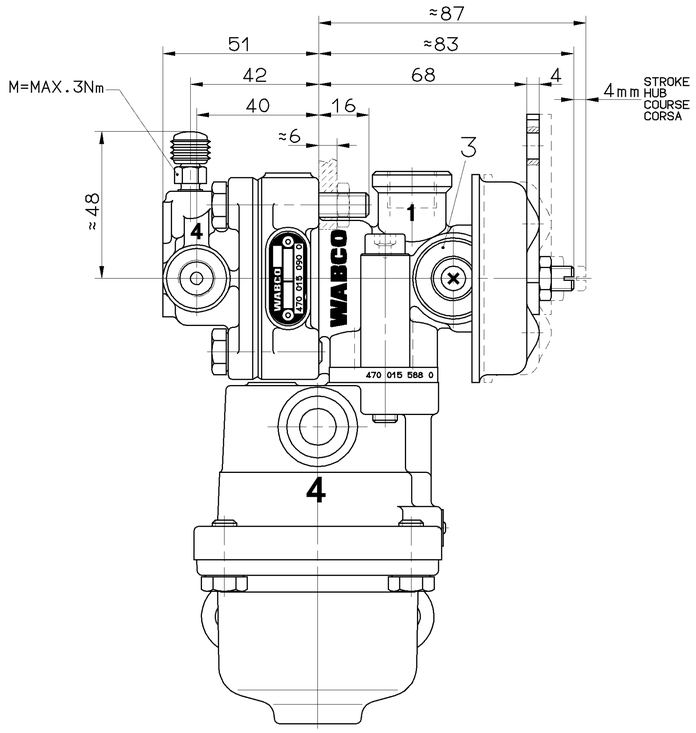

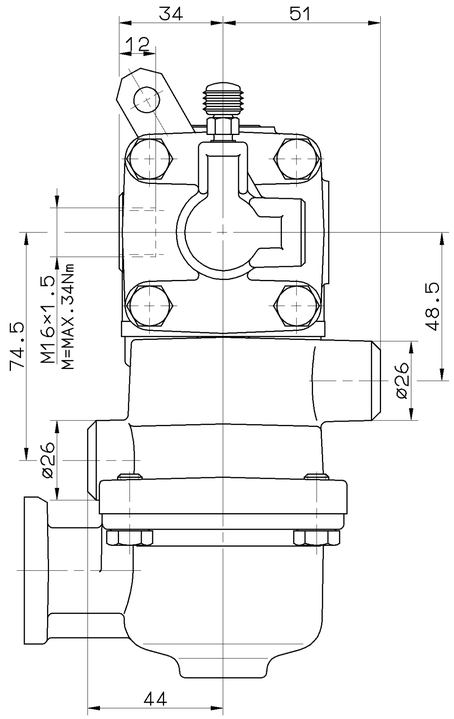

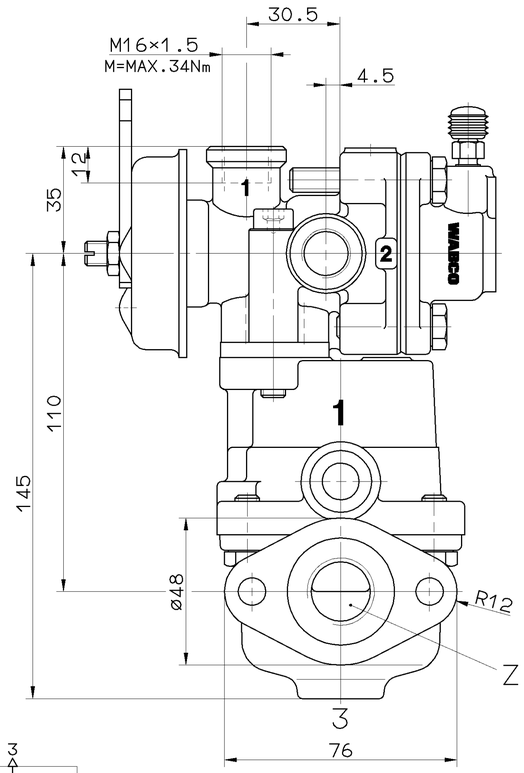

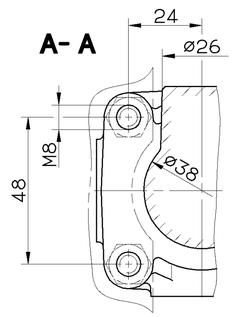

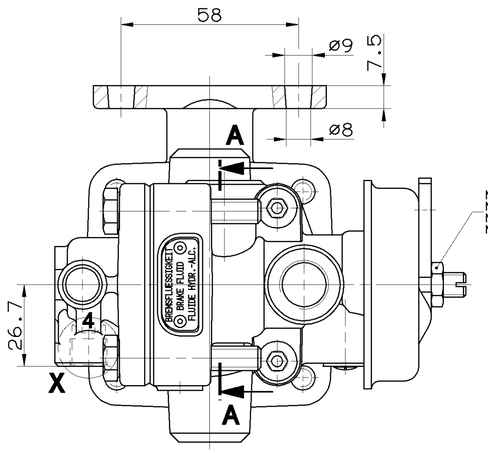

MARKED WITH RED PAINT
MIT ROTEM LACK GEKENNZEICHNET
MARQUE AVEC VERNIS ROUGE
MARCARE CON VERNICE ROSSA

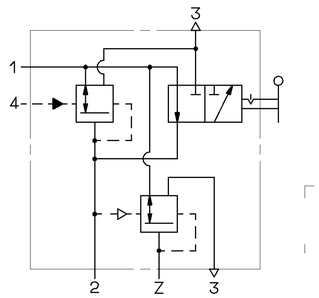

POSITION OF LEVER / HEBELSTELLUNG / POSITION DU LEVIER / POSIZIONE DELLA LEVA		I	II
	P1	7 bar	7 bar
	P2	0 bar	7 bar
	PZ	6 bar	0 bar

ADDITIONAL STROKE:
*UEBERHUB:
COURSE ADDITIONELLE: MAX. 55°
SOVRACCORSA:

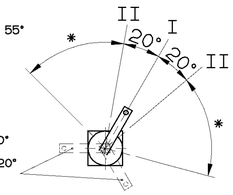

HANDBRAKE LEVER
ADJUSTABLE BY 120°
HANDBREMSHEBEL
VERSTELLBAR UM 120°
LEVIER DU FREIN
A MAIN REGLABLE
TOUS LES 120°
LEVA DI COMMANDO
A MANNO REGOLABILE 120°

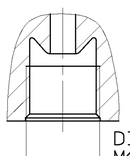

DIN 74235-EL
M12×1 A
M=MAX.21Nm

GENERAL SPECIFICATION: JED-334					
FURTHER TECHNICAL DATA:					
DOC. CODE:	SHEET: TD				
GENERAL TOLERANCES					
CLASS 1)	RANGE OF NOMINAL DIMENSIONS (± mm): ≤50	>50 ≤180	>180 ≤400	>400	
FINE	0,5	1,0	1,5	2,0	
MEDIUM ×	1,0	2,0	3,0	4,0	± 3°
COARSE	2,0	3,5	5,0	6,5	
TAPPED HOLES ACC. ISO 4039 / JED-182					
1) TOLERANCE CLASS APPLIED CROSSMARKED					

DCN-NO.	REV.	DATE
051798	1×A	94-12-01

CADAM-DRAWING COPYRIGHT	DATE	SIGNATURE
DRAWN:	94-12-01	GIESEKE
CHECKED:		MB
STANDARDIZATION:		PANTZER

WABCO

TRAILER CONTROL VALVE
ANHAENGER-STEUERVENTIL
VALVE DE COMMANDE DE REM.
VALVOLA DI COMANDO FR. RI.

MASS	SCALE	PRODUCT IDENTIFICATION NO.	DOC. CODE	SHEET
1.8 KG	1:1 (2:1)	470 015 588 0	605	1/1
SIZE	T.R.I.			
A 1	140			

SHAPE CODE | REPLACEMENT FOR 470 015 588 0 0 OF 83-01-20 (A)

100mm

EXPERT CODE 7 3 7

PRODUCT TYPE 0 1 X

TOUTE COMMUNICATION OU REPRODUCTION DE CE DOCUMENT, TOUTE EXPLOITATION OU COMMUNICATION DE SON CONTENU NON EXPRESSEMENT AUTORISEE DOIVENT ETRE SOUMISES A UNE AUTORISATION ECRITE. TOUS DROITS DE PROPRIETE INDUSTRIELLE RESERVES. ATTENTION EN MATIERE DE BREVETS ET DE MODELES.
NON È PERMESSO CONSEGNARE A TERZI O RIPRODURRE QUESTO DOCUMENTO, NE UTILIZZARE IL CONTENUTO O RENDERLO COMUNICABILE AD ALTRI AL DI FUORI DELLA PRESCELTA AUTORIZZAZIONE. TUTTI I DIRITTI DI PROPRIETÀ INDUSTRIALE SONO RISERVATI. ATTENZIONE ALLE NORME SUI BREVETTI E SUI MODELLI.
DEN DIT DOCUMENT AAN DERDEN TE VERSTREKKEN OF DOEN VERVIELVOUDIGEN, HET GEBRUIK EN/OFWEL DE MEDEDELING VAN DE INHOUD DAARVAN ZONDER DAARTOE VERKREGEN SCHRIFTELIJKE TOESTEMMING IS NIET TOEGESTAAN. TOUTE DROITS DE PROPRIETE INDUSTRIELLE RESERVES. ATTENTION AUX BREVETS ET MODELES.
GEBRAUCHSMUSTER-EINTRAGUNG VORBEHALTEN. ALLE RECHTE UEBER PATENT- UND MUSTERSCHUTZ UND GEBRAUCHSMUSTER-EINTRAGUNG VORBEHALTEN.
THIS DOCUMENT IS THE SUBJECT OF COPYRIGHT AND GIVING IT TO OTHERS AND THE USE OR COMMUNICATION OF THE CONTENTS THEREOF, WITHOUT EXPRESS AUTHORITY, IS PROHIBITED. COPYRIGHT OF THIS DESIGN IS RESERVED. CONSTRUCTIONAL DETAILS MAY BE SUBJECT TO PATENT OR REGISTRATION OF A UTILITY MODEL OR DESIGN. THIS DOCUMENT IS THE SUBJECT OF COPYRIGHT.