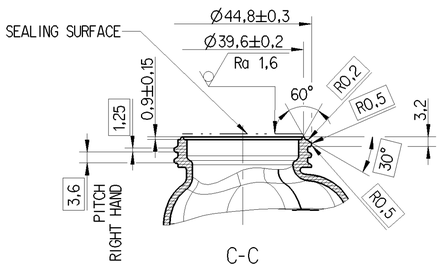

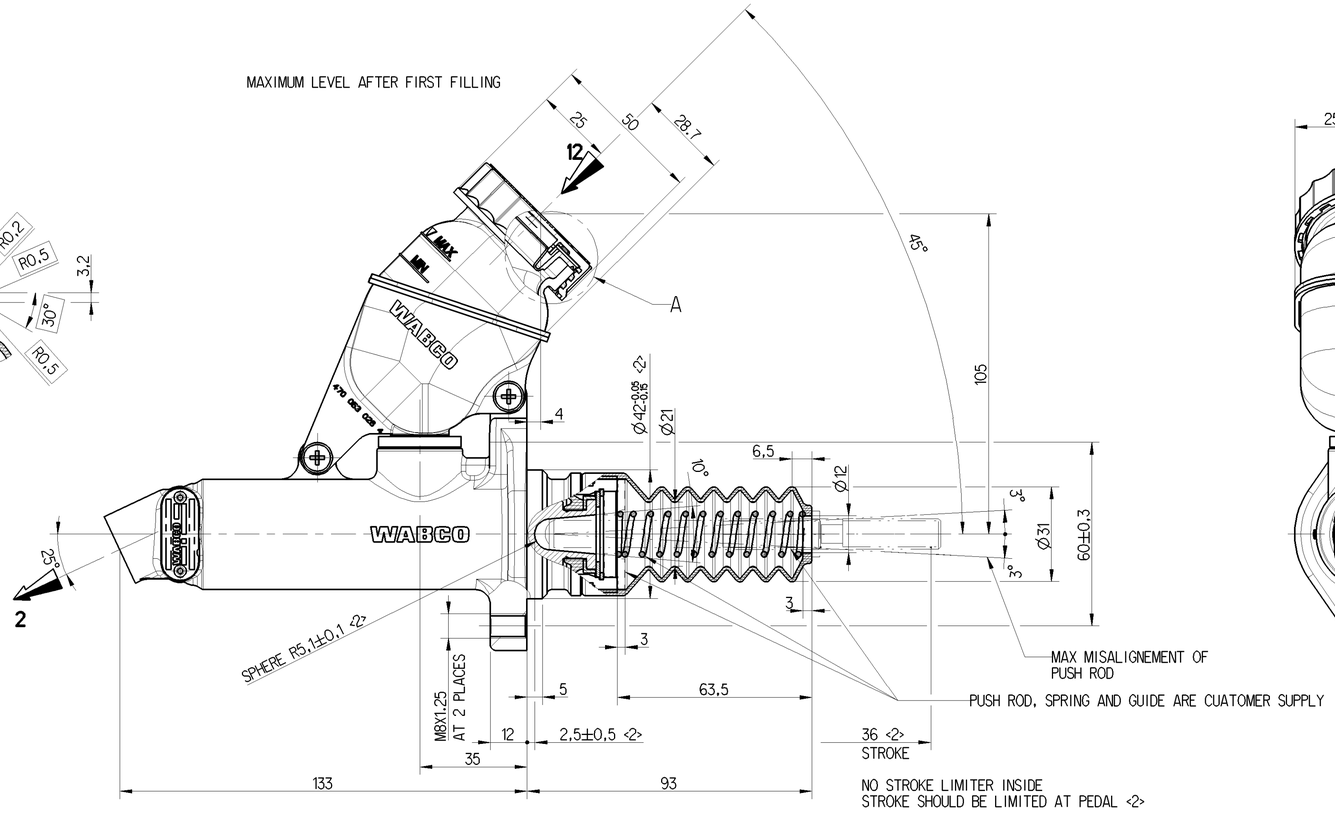

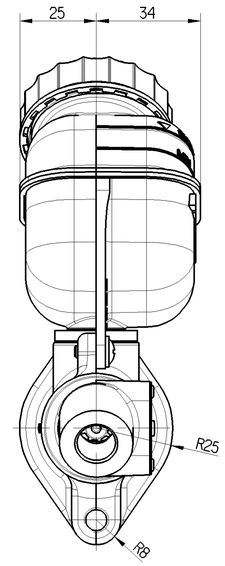

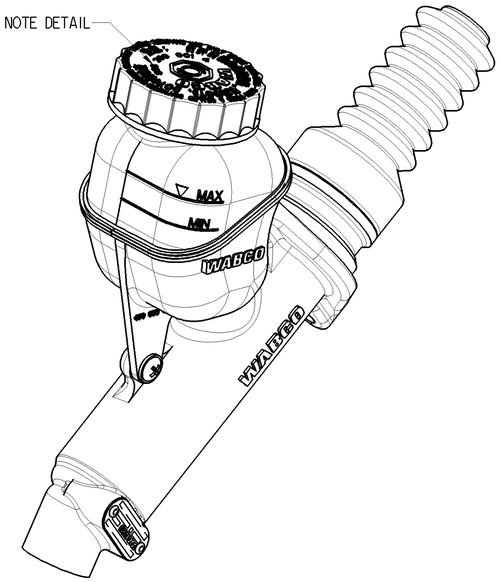

** WARNING CLEAN CAP BEFORE REMOVING.

USE ONLY BRAKE FLUID DOT3 - DOT4 FROM A SEALED CONTAINER.

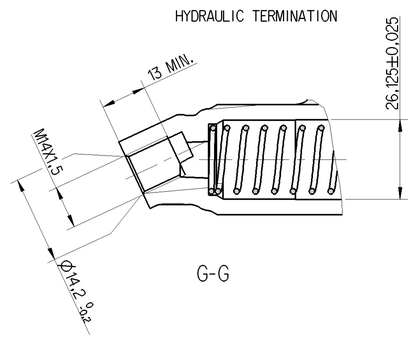

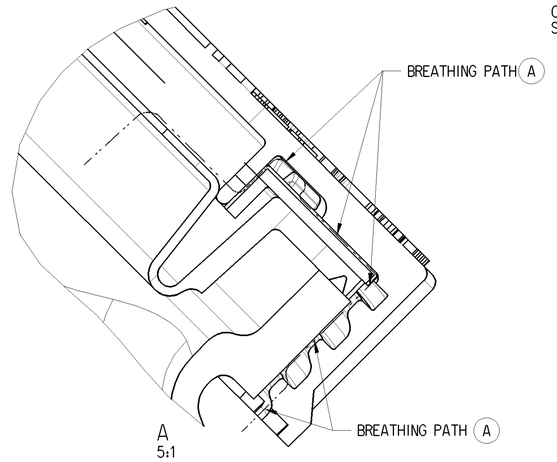

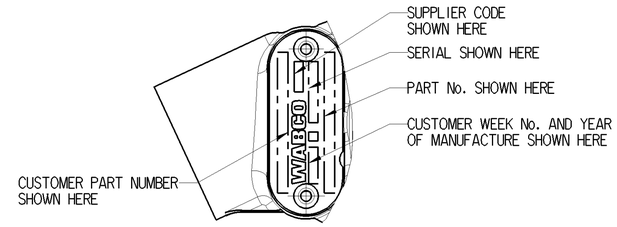

NAME PLATE DETAILS

SCALE 2:1

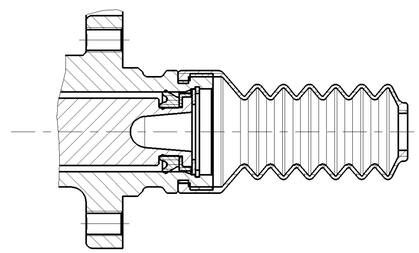

MARKING OF PORTS						
12	OIL INLET	P2	DELIVERED HYDRAULIC PRESSURE	NORMAL PRESSURE : 40 bar MAXIMUM PRESSURE : 120 bar	MAXIMUM FILLING PRESSURE	2,5 bar
					USABLE HYDRAULIC VOLUME	19,2 $^{+1}_{-1}$ cm^3
2	DELIVERY HYDRAULIC	HYDRAULIC FLUID	DOT3 - DOT4 SAE J 1703	THERMAL RANGE -40°C....+80°C		

SYMBOL

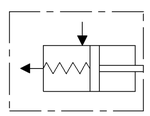

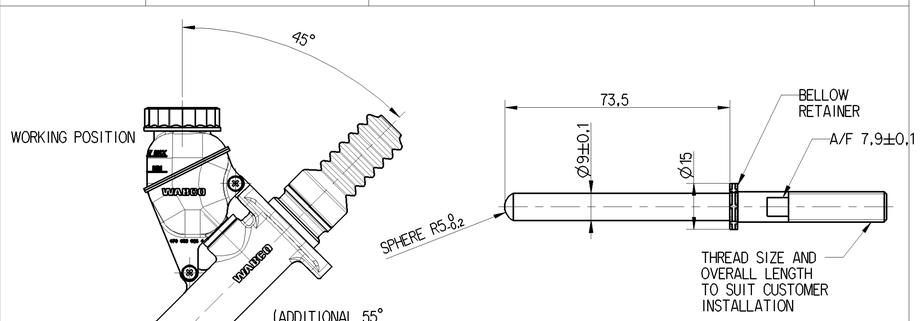

* PUSH ROD - CUSTOMER SUPPLY
MATERIAL: JED 020 M
SURFACE PROTECTION : JED 807.0

CUSTOMER TIGHTENING VALUES [Nm]		
CONNECTION	THREAD SIZE	TORQUE [Nm]
PORT 2	M14 X 1,5	22,5 ±2,5
MOUNTING BOLT	M8 X 1,25	21±4
CAP 12	--	2,5±1

5x <2> SPECIAL CHARACTERISTICS

DELIVERY HYDRAULIC AND BOOT OPENINGS ARE FITTED WITH CLOSURE PLUG FOR STORAGE AND TRANSIT PURPOSES

PRODUCT SPECIFICATION ACCORDING TO 4700530060 435

— · · — · · — BREATHING PATH.

General Specification: JED-334-0
Further Technical Data:
Doc. Code: Sheet: To

General Tolerances JED-261

Class 1)	Range of Nominal Dimensions (± mm) ≤ 50	> 50 ≤ 180	> 180 ≤ 400	> 400	∢
Fine	0.5	1.0	1.5	2.0	±3°
Medium	1.0	2.0	3.0	4.0	
Coarse	2.0	3.5	5.0	6.5	

Tapped Holes acc. JED-152
1) Tolerance Class Applied Crossmarked

Copyright WABCO®

Date	Signature
Drawn 2015-08-03	Qiushuang
Checked 2015-08-06	Praveen
Expert Praveen	

WABCO

MASTER CYLINDER

Mass	Scale	Material No.	Date of first issue: 2010-06-30		
0.506 KG	1:1 1:2 2:1 5:1	470 053 024 0	Doc.Code 005	Language EN	Sheet 1/1
Size A 1	CAD System Pro/E				

ECN-No.	Revision	Techn. Resp.	Replacement for
168229	2 A	5632	/

100mm

Toute Communication ou reproduction de ce document, toute exploitation ou communication de son contenu sont interdites, sauf autorisation écrite préalable. Tous droits de propriété industrielle réservés, notamment en matière de brevets et de modèles.

Weitergabe sowie Vervielfältigung dieser Unterlage, Verwertung und Mitteilung ihres Inhalts nicht gestattet, soweit nicht ausdrücklich zugesichert. Gewerbliche Schutzrechte vorbehalten, insbesondere Patent- und Gebrauchsmusterrechte.

Vietato la divulgazione e la riproduzione di questo documento, così come l'uso e la comunicazione del suo contenuto salvo autorizzazione scritta. Diritti di proprietà industriale riservati, in particolare diritti di brevetto e di modello.

Queda prohibida la difusión y la reproducción de este documento, así como la utilización y la comunicación de su contenido salvo autorización escrita. Reservados los derechos de propiedad industrial, en particular los de patente y los de modelo.

Não é permitido comunicar a terceiros e reproduzir este documento, nem utilizar e comunicar o seu conteúdo sem autorização por escrito. Reservados os direitos de propriedade industrial, nomeadamente os de patente e de modelo.

Copying of this document and giving it to others and the use or communication of the contents thereof, are forbidden without express authority. Offenders are liable to the payment of damages. All rights are reserved in the event of the grant of patent or registration of a utility model or design. This document is the subject of copyright.