<1> SAFETY CHARACTERISTICS	0
<2> SIGNIFICANT CHARACTERISTICS	8

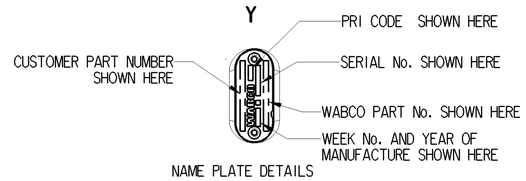

NAME PLATE DETAILS

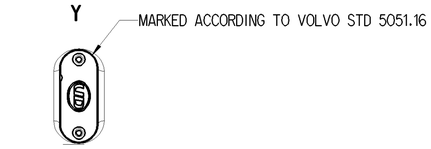

CUSTOMER LOGO DETAIL

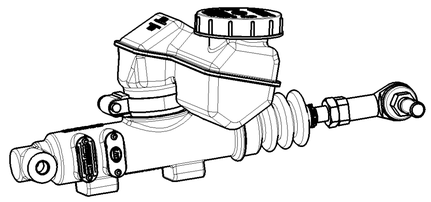

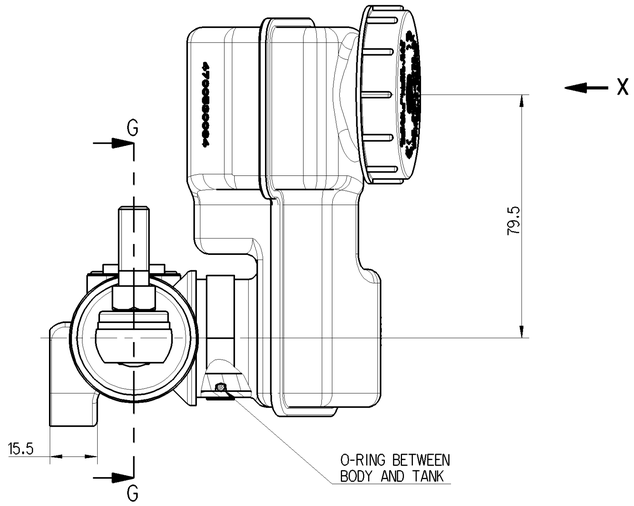

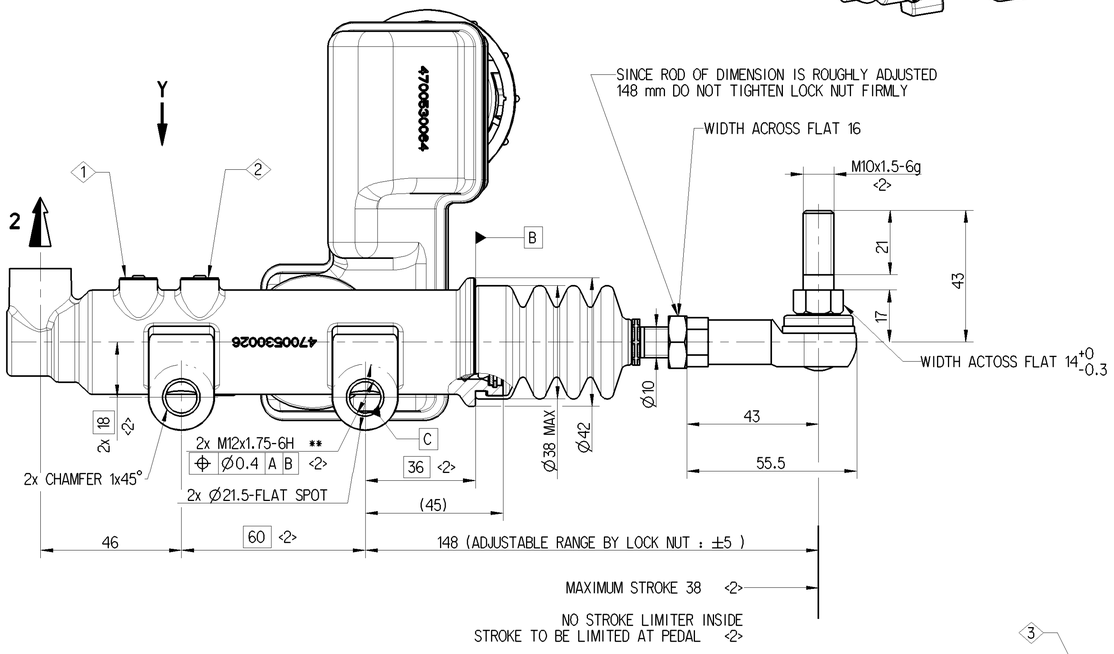

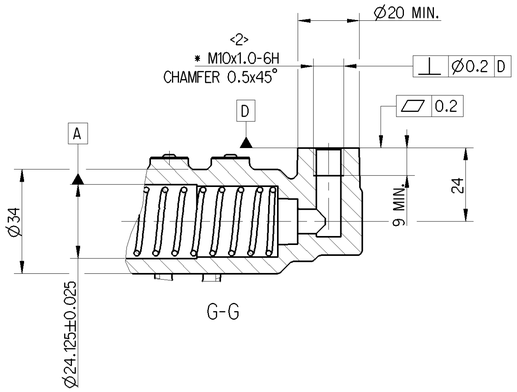

G-G

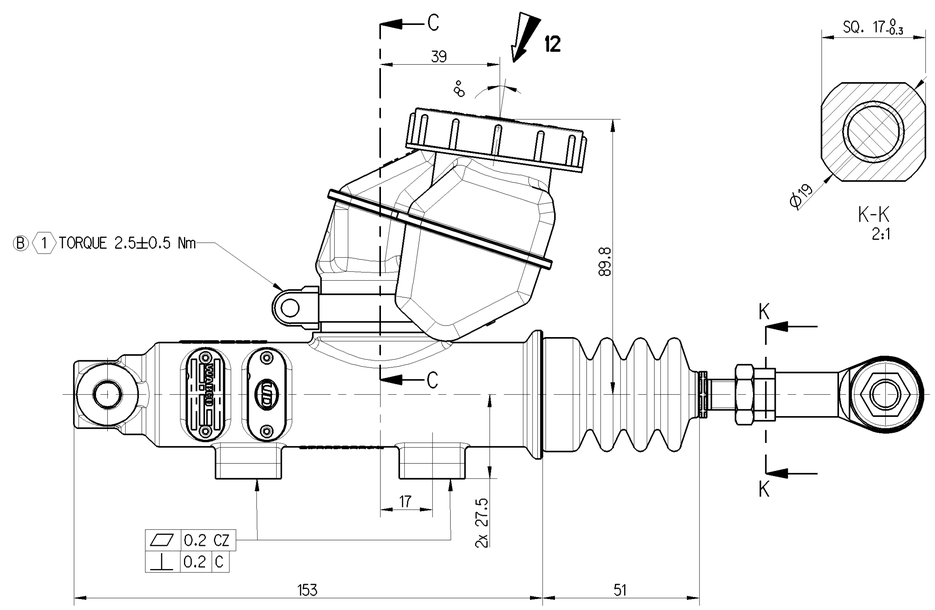

K-K
2:1

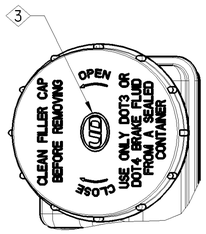

X

MARKING OF PORTS					
12	OIL INLET	P2	DELIVEREY HYDRAULIC PRESSURE	NORMAL PRESSURE :4 MPa (40 bar) MAXIMUM PRESSURE:12 MPa (120 bar)	MAXIMUM STROKE - 38 mm
2	DELIVERY HYDRAULIC	HYDRAULIC FLUID	DOT3 - DOT4 SAE J 1703.	THERMAL RANGE -40°C....+80°C	

SYMBOL

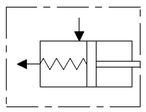

WORKING POISTION

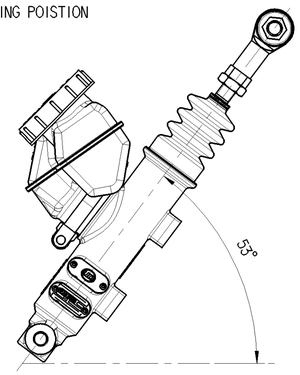

ADDITIONAL 55° ALLOWED FOR CABIN TILTING

CUSTOMER TIGHTENING VALUES [Nm]		
CONNECTION	THREAD SIZE	TORQUE [Nm]
* PORT 2	M10 X 1-6H	12±1
** MOUNTING	M12 X 1.75-6H	55±5

INLET PORT AND DELIVERY PORT FITTED WITH CLOSURE PLUG FOR STORAGE AND TRANSIT PURPOSE

NOTE

DIGITAL SHAPE MODEL IS BASIS WHERE DIMENSIONS ARE OMITTED STD 101-0001

TOLERANCES UNLESS OTHER WISE STATED
OTHER SURFACE ⌓ 0.5 A B C

<1> MARKED ACCORDING TO STD 5051.16
MET 3.2-6-2,1

<2> MET 3.2-20-W10

<3> MET 3.2-20-W12.5

Ⓑ 1 ENSURE NO MOVEMENT/ROTATION OF TANK IS POSSIBLE AFTER TIGHTENING THE CLAMP WITH SPECIFIED TORQUE

General Specification: JED-334-1 , Size ISO 14405 LP							
Further Technical Data:							
Doc. Code:			Sheet:		To		
General Tolerances JED-261							
Class 1)	Range of Nominal Dimensions (± mm) ≤ 50	> 50 ≤ 180	> 180 ≤ 400	> 400	∢		
Fine		0.5	1.0	1.5	2.0		
Medium	X	1.0	2.0	3.0	4.0	±3°	
Coarse		2.0	3.5	5.0	6.5		
Tapped Holes acc. JED-152							
1) Tolerance Class Applied Crossmarked							

Copyright WABCO®

Date	Signature
Drawn 2018-10-08	Zhang
Checked 2018-10-08	Kalimuthu
Expert Proveen. V	

WABCO

MASTER CYLINDER

Mass	Scale	Material No.	Date of first issue: 2014-12-04
0.641 KG (B)	1:1 2:1	470 053 042 0	Doc.Code 005 / Language EN / Sheet 1/1
Size A 1	CAD System CREO		

EDM-No.	Revision	Techn. Resp.	Replacement for
178508	3x B	5632	

100mm

Toute Communication ou reproduction de ce document, toute exploitation ou communication de son contenu sont interdites, sauf autorisation écrite expresse. Tous droits de propriété industrielle réservés, notamment en matière de brevets et de modèles.

Weitergabe sowie Vervielfältigung dieser Unterlage, Verwertung und Mitteilung ihres Inhalts nicht gestattet, soweit nicht ausdrücklich eingeräumt. Zuwiderhandlungen ziehen Schadenersatz nach sich. Alle Rechte für den Fall der Patenterteilung oder Eintragung von Gebrauchsmustern vorbehalten.

Non è permesso consegnare o fare o riprodurre questo documento, né utilizzarne il contenuto o renderlo comunque noto a terzi senza autorizzazione scritta. Tutti i diritti riservati di tutti i diritti derivanti da brevetti o modelli.

Copying of this document and giving it to others and the use or communication of the contents thereof, are forbidden without express authority. Offenders are liable to the payment of damages. All rights are reserved in the event of the grant of patent or registration of a utility model or design. This document is the subject of copyright.