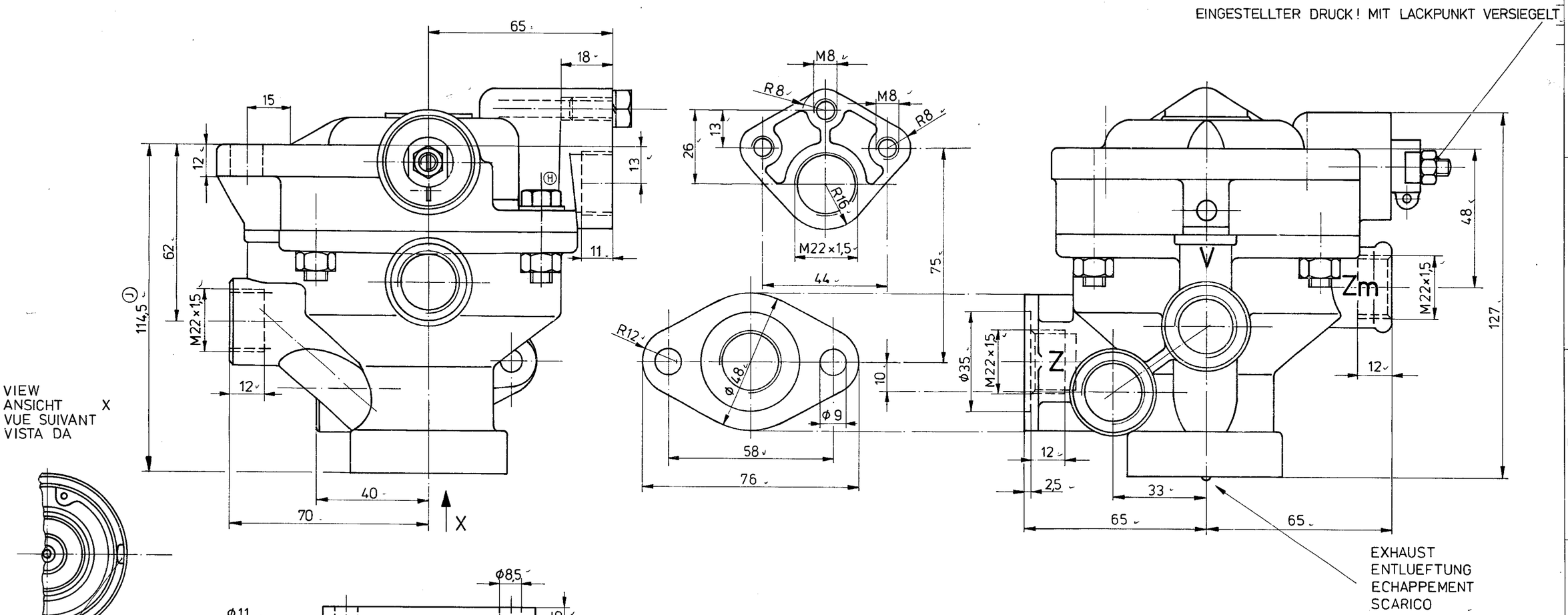


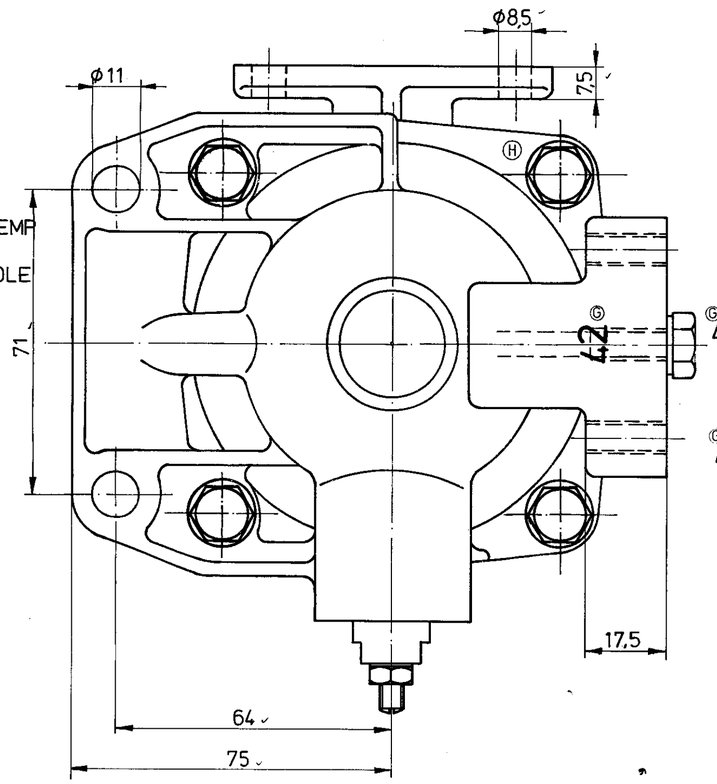


INSPECTION TES. STEMP
PRUEFSTEMPEL
MAQUAGE DE CONTROLE
STAMPIGLIATURA DI
COLLANDO

1 = V = RESERVOIR SUPPLY PORT
ANSCHLUSS FUER LUFTBEHAELTER
ORIFICE AU RESERVOIR
ORIFIZIO AL SERBATOIO

2 = Z = BRAKE CYLINDER PORT
ANSCHLUSS FUER ZYLINDER
ORIFICE AUX ZYLINDRES
ORIFIZIO AI CILINDRI

41 = Zm = PORT FOR SERVICE LINE
ANSCHLUSS FUER BREMSLEITUNG
ORIFICE POUR CONDUITE DIRECTE

42 = M = PORT FOR EMERGENCY LINE
ANSCHLUSS FUER VORRATSLEITUNG
ORIFICE POUR CONDUITE AUTOMATIQUE

WORKING PRESSURE :
BETRIEBSDRUCK : MAX. 8 bar
PRESSION D UTILISATION :
PRESSIONE DI ESERCIZIO :

ADMISSIBLE TEMPERATURE RANGE :
ZULAESSIGER TEMPERATURBEREICH : -40°C.....+80°C
PLAGE DE TEMPERATURES ADMISSIBLES :
GAMMA DI TEMPERATURE AMMISSIBILI :

MEDIUM : AIR
MEDIUM : LUFT
FLUIDE : AIR
FLUIDO : ARIA

| CHANGE NO. | LETT. | DATE |
|---|---|---|
| 054725 | 1× J | 94-06-02 |
| 19667 | 2× H | 79-01-24 |
| A 29139 | G | 74-09-19 |
| A 29135 | F | 74-06-25 |

REPLACEMENT FOR: DRAWING OF 67-08-09

GENERAL SPEC. – ALLGEMEINE SPEZ. – SPEC. GENERALES – SPEC. GENERALI
BLANK NO. – ROHTEILNUMMER / NO. PIECE BRUTE – NO. PEZZO GREZZO
TREATMENT – BEHANDLUNG / TRAITEMENT – TRATTAMENTO
SURFACE PROTECTION – OBERFLACHENSCHUTZ / PROTECTION – PROTEZIONE
MATERIAL – WERKSTOFF / MATIERE – MATERIALE

| | DATE | SIGNATURE |
|---|---|---|
| DRAWN | 74-03-11 | |
| CHECKED | 74-03-11 | |
| STANDARDIZATION | 74-03-11 | |

WABCO WESTINGHOUSE

RELAY EMERGENCY VALVE
VALVE RELAIS D URGENCE
VALVOLA RELE D URGENZA
ANH.-.BREMSVENTIL . . . . .

MASS: Kg | SCALE: 1:1 | IDENTIFICATION CODE: 471 005 020 0 | SHEET

SIZE: A 2 | T.R.I.: 140 | CODE FOR FUNCTION | CODE FOR SHAPE | CODE FOR DOCUMENT: 605

100 mm.

COPYRIGHT BY WESTINGHOUSE BREMSEN- UND APPARATEBAU GMBH HANNOVER

All rights are reserved in the event of the grant of a patent or the registration of a utility model or design.
Alle Rechte für den Fall der Patenterteilung oder Gebrauchsmuster-Eintragung vorbehalten.

Schleicher + Schull GmbH. Einbeck