THE VALVE CORRESPONDS TO THE REGULATIONS FOR ELECTROMAGNETIC DEVICES ACCORDING TO DIN VDE 0580
DAS GERAET ENSPRICHT DEN BESTIMMUNGEN FUER ELEKTROMAGNETISCHE GERAETE NACH DIN VDE 0580
LE VALVE CORRESPOND AUX CONDITIONS POUR DES APPAREILS ELECTROMAGNETIQUES SUIVANT DIN VDE 0580
LA VALVOLA CORRISPONDE ALLE CONDIZIONI PER APPARECCHI ELETTROMAGNETICHI SECONDO DIN VDE 0580

MEDIUM : AIR	NOMINAL CURRENT :	VOLTAGE :
MEDIUM : LUFT	NENNSTROM : 0.41 A	SPANNUNG : $24^{+8}_{-6.5}$ V DC
FLUIDE : AIR	COURANT NOMINAL :	VOLTAGE :
FLUIDO : ARIA	CORRENTE NOMINALE :	VOLTAGGIO :

PERMISSIBLE SWITCH PRESSURE :
ZULAESSIGER SCHALTDRUCK : I => II : (p_1 ; p_2) -p_3 = 0...11 bar
PRESSION DE OUVERTURE/FERMETURE ADMISSIBLE : II => I : (p_2 ; p_3) - p_1 = 0...3 bar
:

PERMISSIBLE PRESSURE : $p_1 = p_2$:
ZULAESSIGER DRUCK : 16 bar : p_3 - (p_1 ; p_2) = 0...3 bar
PRESSION ADMISSIBLE : $p_2 = p_3$:
PRESSIONE AMMISIBILE :

NOMINAL DIAMETER SUPPLY Ø2.2mm, EXHAUST Ø2.2mm	RELATIVE DUTY CYCLE :
NENNWEITE BELUEFTUNG Ø2.2mm, ENTLUEFTUNG Ø2.2mm	RELATIVE EINSCHALTDAUER : 100% ED
DIAMETRE NOMINAL ALIMENTATION Ø2.2mm, ECHAPPEMENT Ø2.2mm	PLAGE DE UTILISATION :
DIAMETRO NOMINALE ALIMENTAZIONE Ø2.2mm, SCARICO Ø2.2mm	DURATE DELL'INSERIMENTO :
THERMAL RANGE OF APPLICATION :	PROTECTION CLASS :
THERMISCHER ANWENDUNGSBEREICH : -40°C...+100°C	SCHUTZKLASSE : III
PLAGE THERMIQUE D'APPLICATION :	CLASSE DE PROTECTION :
CAMPO DI APPLICAZIONE TERMICA :	CLASSE DI PROTEZIONE :

TYPE OF PROTECTION :		AND	WITH SEALED CONNECTIONS 1, 2, 3, 6
SCHUTZART	: IP 6K9K	UND IP 6K7	MIT ABGEDICHTETEN ANSCHLUESSEN 1, 2, 3, 6
MODE DE PROTECTION :		ET	AVEC CONNEXIONS ETANCHEES 1, 2, 3, 6
TIPO DI PROTEZIONE :		E	CON CONNESSIONI SIGILLATI 1, 2, 3, 6

POSITION OF INSTALLATION	: OPTIONAL	BUT WITHOUT SEALED CONNECTION 3	
EINBAULAGE	: BELIEBING	JEDOCH OHNE ABGEDICHTETEN ANSCHLUSS 3	$\alpha = \pm 45°$
POSITION D'INSTALLATION	: AU CHOIX	MAIS SANS CONNEXION ETANCHEE 3	
POSIZIONE DI MONTAGGIO	: A PIACERE	PURCHE SENZA CONNESSION SIGILLATI 3	©

1	SUPPLY ENERGIEZUFLUSS VOM VORRAT ALIMENTATION ALIMENTAZIONE	VOLTAGE PEAKS ON BREAKING : ABSCHALTSPANNUNGSSPITZEN : <165V VOLTAGE DEDE POINTE ALA RUPTURE : VOLTAGGI DELLE PUNTE ALLA ROTTURA :	
2	DELIVERY ENERGIEABFLUSS IN DIE ARBEITSLEITUNG UTILISATION MANDATA		
3	EXHAUST ANSCHLUSS ATMOSPHAERE ECHAPPEMENT SCARICO	OR DELIVERY ODER ENERGIEABFLUSS IN DIE ARBEITSLEITUNG OU UTILISATION O MANDATA	
6	ELECTRIC TERMINAL ELEKTRISCHER ANSCHLUSS BORNE ELECTRIQUE MORSETTI ELETTRICI	PLUG CONNECTION : STECKVERBINDUNG : DIN 72 585-A1-3.2-Sn/K1 CONNEXION A FICHE : COLLEGAMENTO A SPINA :	

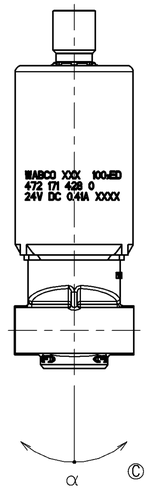

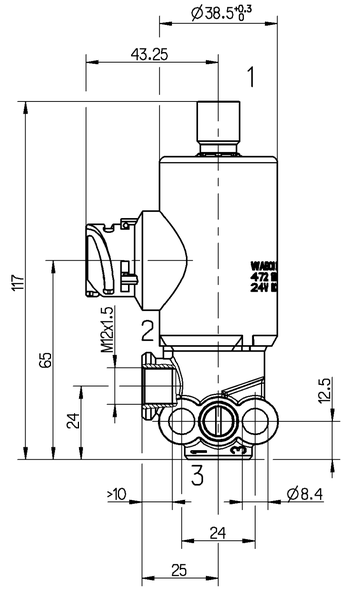

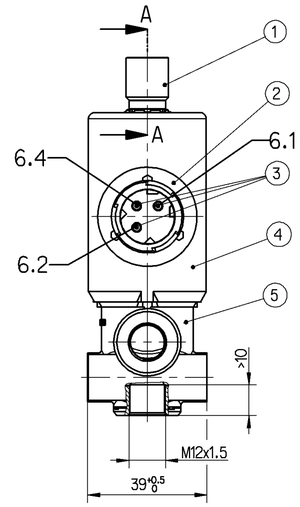

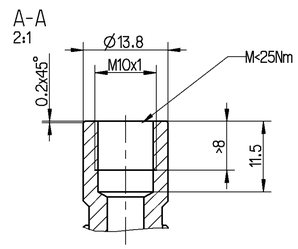

	MATERIAL / SURFACE PROTECTION WERKSTOFF / OBERFLAECHENSCHUTZ MATIERE / PROTECTION DE SURFACE MATERIALE / PROTEZIONE SUPERFICIALE	
1	JED-565	
2	JED-559	
3	JED-570.616	
4	JED-303	JED-739
5	JED-004M	JED-260

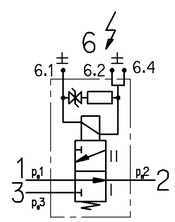

GENERAL SPECIFICATION: JED-334-0					
FURTHER TECHNICAL DATA: 472 171 428 0 ©					
DOC. CODE: 535 SHEET: 1 TO 9					
GENERAL TOLERANCES					
	RANGE OF NOMINAL DIMENSIONS (± mm)				
CLASS 1)	≤ 50	> 50 ≤ 180	> 180 ≤ 400	> 400	
FINE		0.5	1.0	1.5	2.0	
MEDIUM	X	1.0	2.0	3.0	4.0	±3°
COARSE		2.0	3.5	5.0	6.5	
TAPPED HOLES ACC. ISO 4039 / JED-152					
1) TOLERANCE CLASS APPLIED CROSSMARKED					

081358	4xC	02-04-19
DCN-NO.	REV.	DATE

Pro/ENGINEER DRAWING COPYRIGHT		
DATE	SIGNATURE	
DRAWN 02-04-19	Runge	
CHECKED 02-04-19	Rovira	
EXPERT CODE 7 2 6		
MASS 0.5 KG	SCALE 1:1 (2:1)	
SIZE A 1	TRI 142	

WABCO

3/2 SOLENOID VALVE
PLEASE FILL IN THE DESIGNATION
ELECTROVANNE 3/2
ELETTROVALVOLA 3/2

PRODUCT IDENTIFICATION NO. 472 171 428 0

DOC. CODE	SHEET
605	1/1

FUNCTION CODE | SHAPE CODE | PRODUCT TYPE 9 2 | REPLACEMENT FOR 472 171 428 0 of 95-08-05

©

TUTTE COMMUNICATION OU REPRODUCTION DE CE DOCUMENT, TOUTE EXPLOITATION OU COMMUNICATION DE SON CONTENU EN DOIT ETRE PRECISEE AUX ETAT-MAJORS DE WABCO. TOUTE INFRACTION EST PASSIBLE DE DOMMAGES-INTERETS.
ALLE WEITERGABE UND VERVIELFAELTIGUNG DIESER UNTERLAGE SOWIE VERWERTUNG UND MITTEILUNG IHRES INHALTS SIND WABCO VORBEHALTEN. ZUWIDERHANDLUNGEN VERPFLICHTEN ZU SCHADENSERSATZ.
THIS DOCUMENT AND GIVING IT TO OTHERS AND THE USE OF COMMUNICATION OF THE CONTENTS THEREOF ARE RESERVED TO WABCO. OFFENDERS ARE LIABLE TO PAY DAMAGES. WE RESERVE ALL RIGHTS IN THIS DOCUMENT IN THE EVENT OF A PATENT OR REGISTRATION OF A UTILITY MODEL OR DESIGN. THIS DOCUMENT IS THE WABCO COPYRIGHT.

Dw: 472171428__535
TML: 472171428__A02