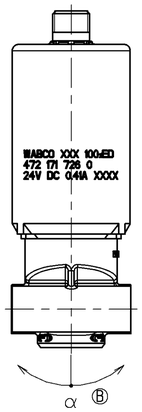

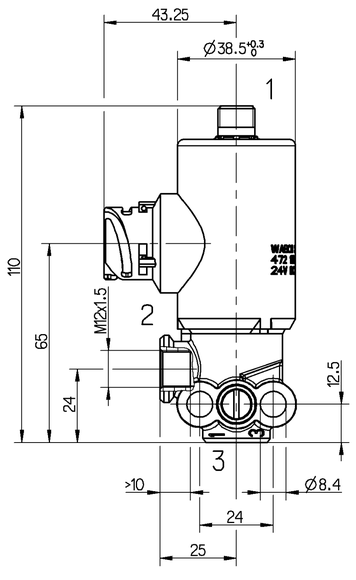

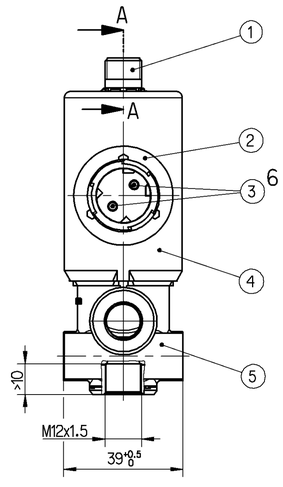

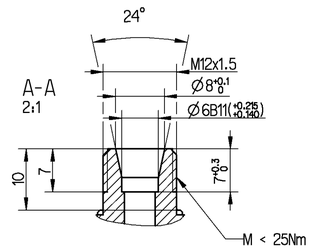

THE VALVE CORRESPONDS TO THE REGULATIONS FOR ELECTROMAGNETIC DEVICES ACCORDING TO DIN VDE 0580
DAS GERAET ENSPRICHT DEN BESTIMMUNGEN FUER ELEKTROMAGNETISCHE GERAETE NACH DIN VDE 0580
LE VALVE CORRESPOND AUX CONDITIONS POUR DES APPAREILS ELECTROMAGNETIQUES SUIVANT DIN VDE 0580
LA VALVOLA CORRISPONDE ALLE CONDIZIONI PER APPARECCHI ELETTROMAGNETICHI SECONDO DIN VDE 0580

MEDIUM : AIR
MEDIUM : LUFT
FLUIDE : AIR
FLUIDO : ARIA

NOMINAL CURRENT :
NENNSTROM : 0.41 A
COURANT NOMINAL :
CORRENTE NOMINALE :

VOLTAGE :
SPANNUNG : $24^{+8}_{-6.5}$ V DC
VOLTAGE :
VOLTAGGIO :

PERMISSIBLE SWITCH PRESSURE :
ZULAESIGER SCHALTDRUCK : I => II : (p_e1 ; p_e2) - p_e3 = 0...11 bar
PRESSION DE OUVERTURE/FERMETURE ADMISSIBLE : II => I : (p_e2 ; p_e3) - p_e1 = 0...3 bar

PERMISSIBLE PRESSURE : p_e1 = p_e2 :
ZULAESSIGER DRUCK :
PRESSION ADMISSIBLE : p_e2 = p_e3 :
PRESSIONE AMMISIBILE :
16 bar : p_e3 - (p_e1 ; p_e2) = 0...3 bar

NOMINAL DIAMETER SUPPLY Ø2.2mm, EXHAUST Ø2.2mm
NENNWEITE BELUEFTUNG Ø2.2mm, ENTLUEFTUNG Ø2.2mm
DIAMETRE NOMINAL ALIMENTATION Ø2.2mm, ECHAPPEMENT Ø2.2mm
DIAMETRO NOMINALE ALIMENTAZIONE Ø2.2mm, SCARICO Ø2.2mm

PROTECTION CLASS :
SCHUTZKLASSE : III
CLASSE DE PROTECTION :
CLASSE DI PROTEZIONE :

THERMAL RANGE OF APPLICATION :
THERMISCHER ANWENDUNGSBEREICH : -40°C...+100°C
PLAGE THERMIQUE D'APPLICATION :
CAMPO DI APPLICAZIONE TERMICA :

RELATIVE DUTY CYCLE :
RELATIVE EINSCHALTDAUER : 100% ED
PLAGE DE UTILISATION :
DURATE DELL'INSERIMENTO :

TYPE OF PROTECTION : IP 6K9K AND IP 6K7 WITH SEALED CONNECTIONS 1, 2, 3, 6
SCHUTZART : IP 6K9K UND IP 6K7 MIT ABGEDICHTETEN ANSCHLUESSEN 1, 2, 3, 6
MODE DE PROTECTION : IP 6K9K ET IP 6K7 AVEC CONNEXIONS ETANCHEES 1, 2, 3, 6
TIPO DI PROTEZIONE : IP 6K9K E IP 6K7 CON CONNESSIONI SIGILLATI 1, 2, 3, 6

POSITION OF INSTALLATION : OPTIONAL BUT WITHOUT SEALED CONNECTION 3
EINBAULAGE : BELIEBING JEDOCH OHNE ABGEDICHTETEN ANSCHLUSS 3 α = ±45°
POSITION D'INSTALLATION : AU CHOIX MAIS SANS CONNEXION ETANCHEE 3
POSIZIONE DI MONTAGGIO : A PIACERE PURCHE SENZA CONNESSION SIGILLATI 3 Ⓑ

VOLTAGE PEAKS ON BREAKING :
ABSCHALTSPANNUNGSSPITZEN : <|65|V
VOLTAGE DEDE POINTE ALA RUPTURE :
VOLTAGGI DELLE PUNTE ALLA ROTTURA :

1 SUPPLY
ENERGIEZUFLUSS VOM VORRAT
ALIMENTATION
ALIMENTAZIONE

2 DELIVERY
ENERGIEABFLUSS IN DIE ARBEITSLEITUNG
UTILISATION
MANDATA

3 EXHAUST OR DELIVERY
ANSCHLUSS ATMOSPHAERE ODER ENERGIEABFLUSS IN DIE ARBEITSLEITUNG
ECHAPPEMENT OU UTILISATION
SCARICO O MANDATA

6 ELECTRIC TERMINAL CONNECTOR
ELEKTRISCHER ANSCHLUSS STECKVERBINDER DIN 72585-A1-2.1-Sn/K1
BORNE ELECTRIQUE CONNECTEUR
MORSETTI ELETTRICI CONNETTORE

	MATERIAL / SURFACE PROTECTION WERKSTOFF / OBERFLAECHENSCHUTZ MATIERE / PROTECTION DE SURFACE MATERIALE / PROTEZIONE SUPERFICIALE	
1	JED-565	
2	JED-559	
3	JED-570.616	
4	JED-303	JED-739
5	JED-004M	JED-260

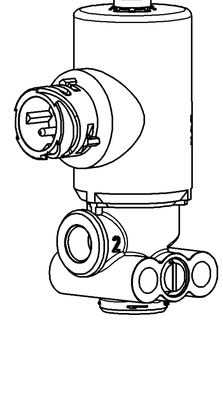

GENERAL SPECIFICATION: JED-334-0					
FURTHER TECHNICAL DATA: 472 171 726 0 Ⓑ					
DOC. CODE: 535	SHEET: 1 TO 9				
GENERAL TOLERANCES					
RANGE OF NOMINAL DIMENSIONS (± mm)					
CLASS 1)	≤ 50	> 50 ≤ 180	> 180 ≤ 400	> 400	
FINE	0.5	1.0	1.5	2.0	
MEDIUM X	1.0	2.0	3.0	4.0	±3°
COARSE	2.0	3.5	5.0	6.5	
TAPPED HOLES ACC. ISO 4039 / JED-152					
1) TOLERANCE CLASS APPLIED CROSSMARKED					

081358	4xB	02-04-19
DCN-NO.	REV.	DATE

Pro/ENGINEER DRAWING COPYRIGHT

DATE	SIGNATURE
DRAWN 02-04-19	Runge
CHECKED 02-04-19	Rovira
EXPERT CODE 7 2 6	

WABCO

3/2 SOLENOID VALVE
PLEASE FILL IN THE DESIGNATION
ELECTROVANNE 3/2
ELETTROVALVOLA 3/2

MASS	SCALE	PRODUCT IDENTIFICATION NO.	DOC. CODE	SHEET
0.5 KG	1:1 (2:1)	472 171 726 0	605	1/1

SIZE	TRI	FUNCTION CODE	SHAPE CODE	PRODUCT TYPE	REPLACEMENT FOR
A 1	142			9 2	472 171 726 0 of 96-02-28

Ⓑ

TOUTE COMMUNICATION OU REPRODUCTION DE CE DOCUMENT, TOUTE UTILISATION OU COMMUNICATION DE SON CONTENU SONT INTERDITES SAUF AUTORISATION EXPRESSE. TOUTES LES DONNEES, DESSINS, MODELES, ETC. SONT PROTEGES PAR LE DROIT D'AUTEUR ET LE DROIT DES MODELES INDUSTRIELS.

DOVE È PERMESSO CONSEGNARE A TERZI O RIPRODURRE QUESTO DOCUMENTO, NE UTILIZZARE IL CONTENUTO O RENDERLO COMUNQUE NOTO A TERZI. SONO RISERVATI I DIRITTI DI COPIA, VERSIONE ED ESTRAZIONE DI BREVETTI.

COPYING OF THIS DOCUMENT AND GIVING IT TO OTHERS AND THE USE OR COMMUNICATION OF THE CONTENTS THEREOF ARE FORBIDDEN UNLESS EXPRESSLY CONCEDED. COPYRIGHT OF THIS DOCUMENT, DISTRIBUTION AND RIGHTS IN THE EVENT OF THE GRANT OF PATENT OR REGISTRATION OF A UTILITY MODEL OR DESIGN THIS DOCUMENT IS THE SUBJECT OF COPYRIGHT

Dwg.: 472171726_605 A02 ■■■
TML: 472171726_____ 605