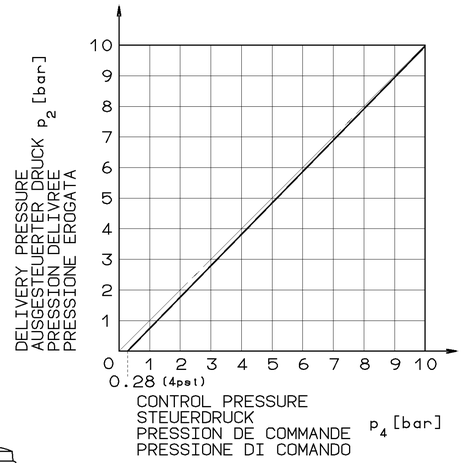

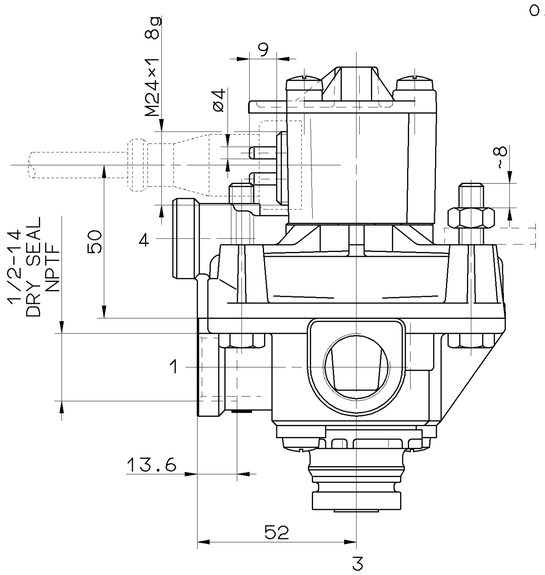

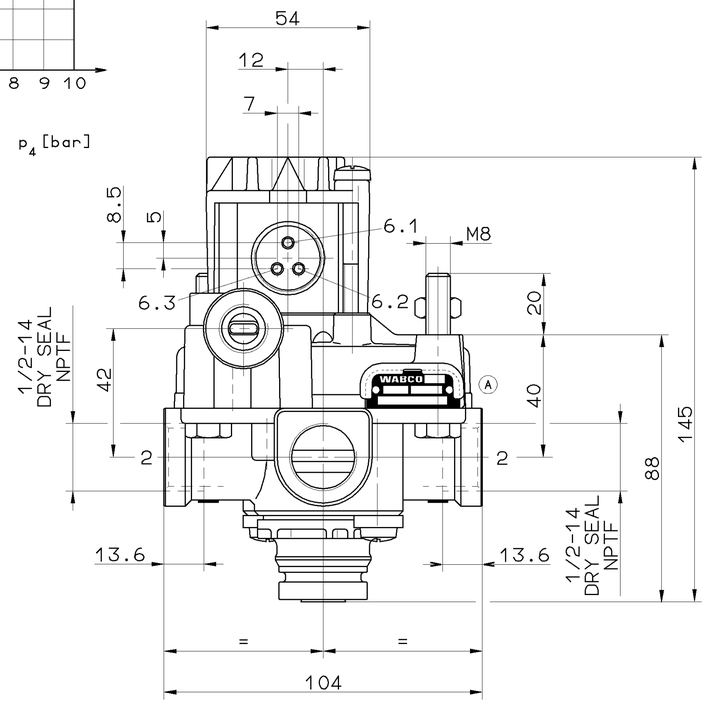

THE VALVE CORRESPONDS TO THE REGULATIONS FOR ELECTROMAGNETIC DEVICES ACCORDING TO VDE 0580
DAS GERAET ENTSPRICHT DEN BESTIMMUNGEN FUER ELEKTROMAGNETISCHE GERAETE NACH VDE 0580
LA VALVE CORRESPOND AUX CONDITIONS POUR DES APPAREILS ELECTROMAGNETIQUES SUIVANT VDE 0580
LA VALVOLA CORRISPONDE ALLE CONDIZIONI PER APPARECCHI ELECTROMAGNETICHI SECONDO VDE 0580

MEDIUM MEDIUM FLUIDE FLUIDO	AIR LUFT AIR ARIA
VOLTAGE SPANNUNG VOLTAGE VOLTAGGIO	$12^{+2.4}_{-1.2}$ V
TYPE OF CURRENT STROMART NATURE DU COURANT NATURA DELLA CORRENTE	DIRECT CURRENT GLEICHSTROM COURANT CONTNU CORRENTE CONTINUA
SERVICE CONDITION BETRIEBSART CONDITION DU SERVICE CONDIZIONE DI SERVISO	DISCONTINUOUS SERVICE AUSSETZBETRIEB ED 5%/5min SERVICE DISCONTINUE ESERCIZIO DISCONTINUO
NOMINAL CURRENT NENNSTROM COURANT NOMINAL CURRENTE NOMINALE	2.22 A
TYPE OF PROTECTION SCHUTZART MODE DE PROTECTION TIPO DI PROTEZIONE	IP 68 EN 60529/IEC 529
PROTECTION CLASS SCHUTZKLASSE CLASSE DE PROTECTION CLASSE DI PROTEZIONE	III
WORKING PRESSURE BETRIEBSDRUCK PRESSION D'UTILISATION PRESSION DI ESERCIZIO	MAX. 10 bar
THERMAL RANGE OF APPLICATION THERMISCHER ANWENDUNGSBEREICH GAMME D'APPLICATION THERMIQUE CAMPO DI APPLICAZIONE THERMICA	-40°C....+80°C
SOCKET GERAETESTECKDOSE PRISE DE COURANT PRESA DI CORRENTE	894 601 018 2
ADMISSIBLE INSTALLATION POSITION ZULAESSIGE EINBAULAGE POSITION D'INSTALLATION ADMISE POSIZIONEEDI MONTAGGIO AMMESSA	±15°
FOR FURTHER TECHNICAL DATA SEE PRODUCT SPECIFICATION WEITERE TECHNISCHE DATEN SIEHE PRODUKT SPEZIFIKATION POUR AUTRES DONNEES TECHNIQUES VOIR PRODUCT SPECIFICATION PER ULTERIORI DATI TECNICI VEDERE SPECIFICA DI PRODOTTO	472 195 023 0 (CODE 435)

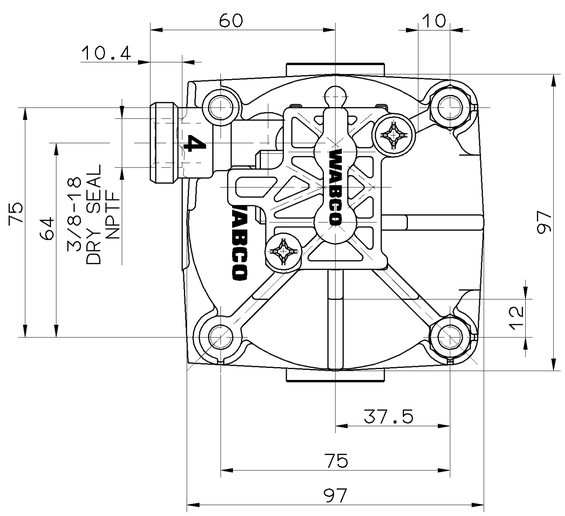

1 SUPPLY OF ENERGY
ENERGIEZUFLUSS
ALIMENTATION
ALIMENTATIONE

2 DELIVERY OF ENERGY
ENERGIEABFLUSS
UTILISATION
MANDATA

3 EXHAUST
ENTLUEFTUNG
ECHAPPEMENT
SCARICO

4 CONTROL
STEUERANSCHLUSS
COMMANDE
COMMANDO

6.1 ELECTRICAL CONTROL (MAGNET)
6.2 ELEKTRISCHER STEUERANSCHLUSS (MAGNET)
6.3 COMMANDE ELECTRIQUE (AIMANT)
6.3 COMMANDO ELECTRICO (MAGNETE)

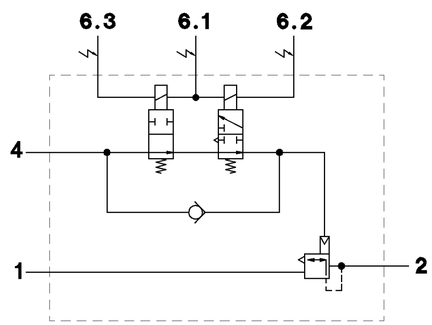

GENERAL SPECIFICATION: JED-334					
FURTHER TECHNICAL DATA:					
DOC. CODE:	SHEET: TO				
GENERAL TOLERANCES					
CLASS 1)	RANGE OF NOMINAL DIMENSIONS (± mm) ≤50	>50 ≤180	>180 ≤400	>400	∢
FINE	0,5	1,0	1,5	2,0	
MEDIUM *	1,0	2,0	3,0	4,0	± 3°
COARSE	2,0	3,5	5,0	6,5	
TAPPED HOLES ACC. ISO 4039 / JED-152					
1) TOLERANCE CLASS APPLIED CROSSMARKED					

DCN-NO.	REV.	DATE
057535	1× A	95-06-07

100mm

CADAM-DRAWING COPYRIGHT		
DATE	SIGNATURE	
DRAWN: 93-01-27	HARNISCHM	
CHECKED: 93-01-27	HOEFLER	
STANDARDIZATION: 93-01-27	PANTZER	
MASS 0.910 KG	SCALE 1:1	
SIZE A 1	T.R.I. 141	

WABCO

ABS-RELAY MODULATOR
ABS-RELAISVENTIL
ABS-VALVE RELAIS
ABS-VALVOLA RELE

PRODUCT IDENTIFICATION NO.: 472 195 023 0

DOC. CODE	SHEET
605	1/1

SHAPE CODE | REPLACEMENT FOR

EXPERT CODE 760 | PRODUCT TYPE 02X

TOUTE COMMUNICATION OU REPRODUCTION DE CE DOCUMENT, TOUTE EXPLOITATION OU COMMUNICATION DE SON CONTENU NE LEUR EST PAS PERMIS SAUF AUTORISATION EXPRESSE. TOUS DROITS DE PROPRIETE INTELLECTUELLE RESERVES. AU CAS OU CE DOCUMENT DEFINIRAIT UN MODELE D'UTILITE OU UN MODELE ESTHETIQUE, WABCO SE RESERVE LE DROIT DE DEPOSER UNE DEMANDE DE BREVET OU DE MODELE D'UTILITE OU DE DESSIN OU MODELE.

NON È PERMESSO CONSEGNARE A TERZI O RIPRODURRE QUESTO DOCUMENTO, NE UTILIZZARE IL CONTENUTO O RENDERLO COMUNQUE NOTO A TERZI SENZA ESPRESSA AUTORIZZAZIONE. TUTTI I DIRITTI DI PROPRIETÀ INTELLETTUALE SONO RISERVATI. SE QUESTO DOCUMENTO DEFINISCE UN MODELLO DI UTILITÀ O DESIGN, WABCO SI RIVOLGERÀ PER LA REGISTRAZIONE DI UN MODELLO DI UTILITÀ O DESIGN.

DOCUMENT IS NOT TO BE REPRODUCED OR GIVEN TO OTHERS AND THE USE OF COMMUNICATION OF THE CONTENTS THEREOF IS NOT PERMITTED WITHOUT AUTHORISATION. ALL RIGHTS RESERVED. IF THIS DOCUMENT DEFINES A UTILITY MODEL OR DESIGN, WABCO WILL APPLY FOR REGISTRATION OF A UTILITY MODEL OR DESIGN.

DIESES DOKUMENT DARF WEDER KOPIERT, NOCH WEITERGEGEBEN ODER DEN INHALTE NICHT ANDEREN MITTEILEN OHNE AUSDRUCKLICHE ERLAUBNIS. ALLE RECHTE FÜR DEN FALL DER ERTEILUNG VON PATENT OD. GebrauchsmusterEINTRAGUNG VORBEHALTEN.