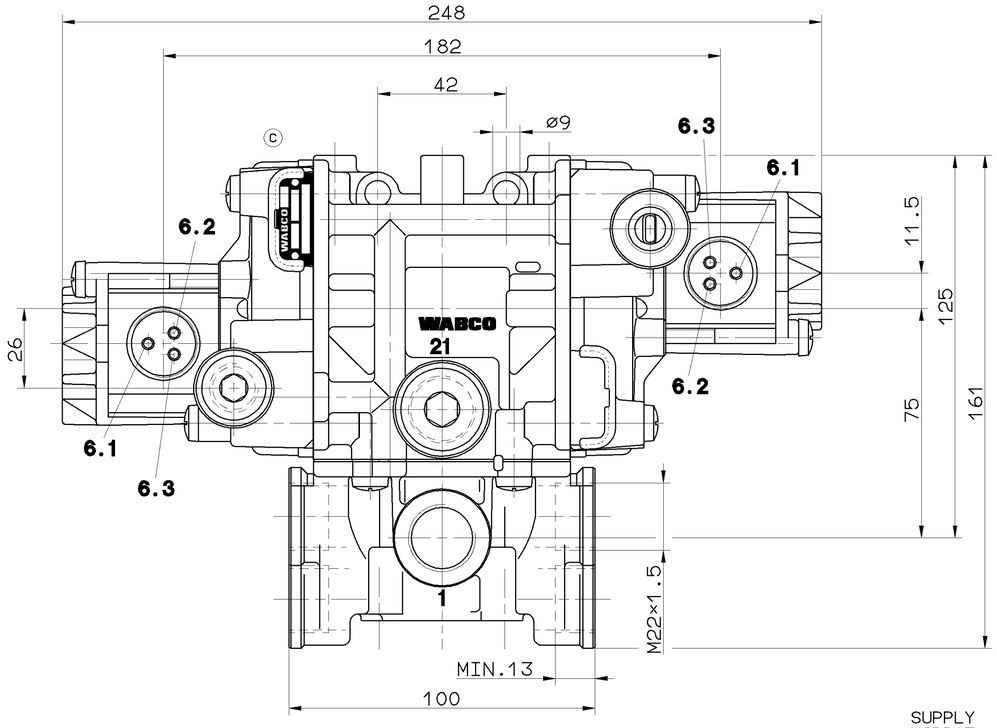

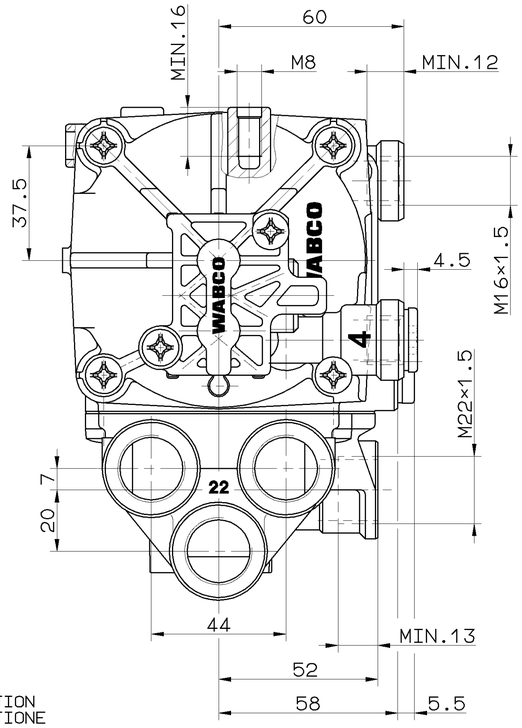

THE VALVE CORRESPONDS TO THE REGULATIONS FOR ELECTROMAGNETIC DEVICES ACCORDING TO VDE 0580
DAS GERAET ENTSPRICHT DEN BESTIMMUNGEN FUER ELEKTROMAGNETISCHE GERAETE NACH VDE 0580
LA VALVE CORRESPOND AUX CONDITIONS POUR DES APPAREILS ELECTROMAGNETIQUES SUIVANT VDE 0580
LA VALVOLA CORRISPONDE ALLE CONDIZIONI PER APPARECCHI ELECTROMAGNETICHI SECONDO VDE 0580

MEDIUM MEDIUM FLUIDE FLUIDO	AIR LUFT AIR ARIA
VOLTAGE SPANNUNG VOLTAGE VOLTAGGIO	24 V
TYPE OF CURRENT STROMART NATURE DU COURANT NATURA DELLA CORRENTE	DIRECT CURRENT GLEICHSTROM COURANT CONTNU CORRENTE CONTINUA
SERVICE CONDITION BETRIEBSART CONDITION DU SERVICE CONDIZIONE DI SERVISO	DISCONTINUOUS SERVICE AUSSETZBETRIEB ED 5%/5min SERVICE DISCONTINUE ESERCIZIO DISCONTINUO
NOMINAL CURRENT NENNSTROM COURANT NOMINAL CURRENTE NOMINALE	1,65 A
TYPE OF PROTECTION SCHUTZART MODE DE PROTECTIONT TIPO DI PROTEZIONE	IP 66/69K IEC 529
PROTECTION CLASS SCHUTZKLASSE CLASSE DE PROTECTION CLASSE DI PROTEZIONE	III
WORKING PRESSURE BETRIEBSDRUCK PRESSION DE SERVICE PRESSIONE D'ESERCIZIO	MAX.p_e 10bar
SUPPLY PRESSURE VORRATSDRUCK PRESSION D'ALIMENTATION PRESSIONE DI ALIMENTAZIONE	MAX.p_e 13bar
THERMAL RANGE OF APPLICATION THERMISCHER ANWENDUNGSBEREICH GAMME D'APPLICATION THERMIQUE CAMPO DI APPLICAZIONE THERMICA	-40°C....+80°C
SOCKET GERAETESTECKDOSE PRISE DE COURANT PRESA DI CORRENTE	894 601 018 2 449 511 000 0
ADMISSIBLE INSTALLATION POSITION ZULAESSIGE EINBAULAGE POSITION D'INSTALLATION ADMISE POSIZIONEEDI MONTAGGIO AMMESSA	±15°

1 SUPPLY
VORRAT
ALIMENTATION
ALIMENTATIONE

21 DELIVERY OF ENERGY
22 ENERGIEABFLUSS
UTILISATION
23 MANDATA

3 EXHAUST
ENTLUEFTUNG
ECHAPPEMENT
SCARICO

4 CONTROL
STEUERANSCHLUSS
COMMANDE
COMMANDO

6.1 ELECTRICAL CONTROL (MAGNET)
6.2 ELEKTRISCHER STEUERANSCHLUSS (MAGNET)
6.3 COMMANDE ELECTRIQUE (AIMANT)
6.3 COMMANDO ELECTRICO (MAGNETE)

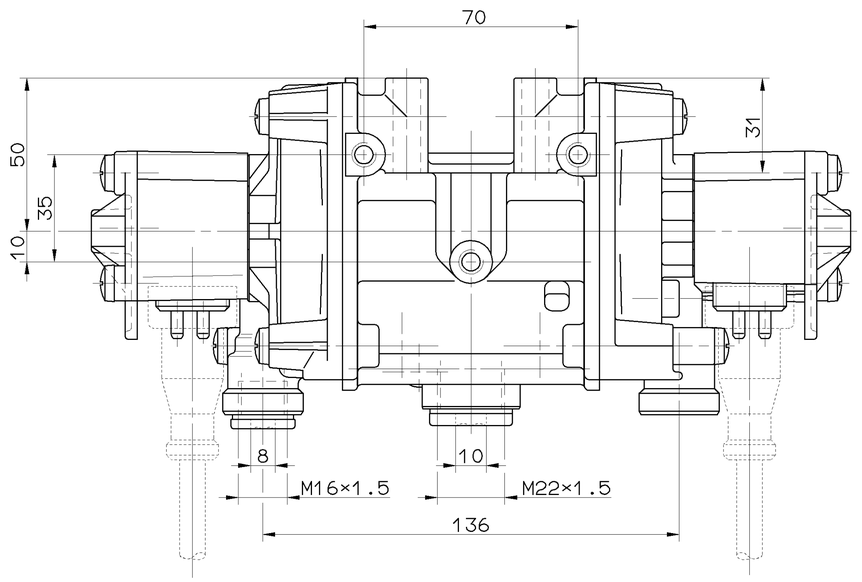

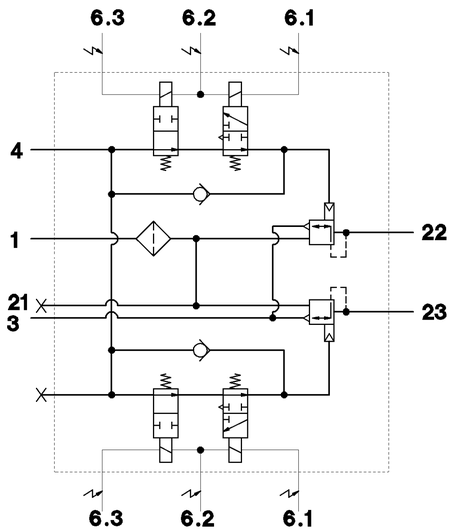

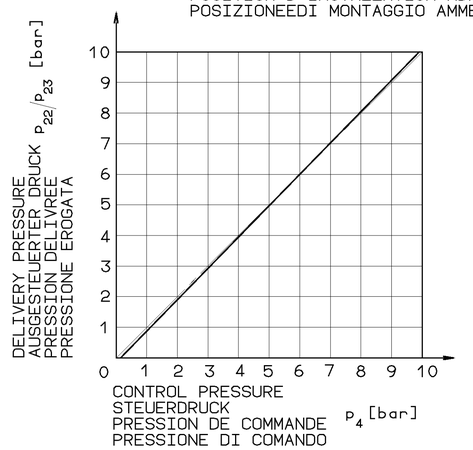

FOR FURTHER TECHNICAL DATA SEE PRODUCT SPECIFICATION
WEITERE TECHNISCHE DATEN SIEHE PRODUKT SPEZIFIKATION
POUR AUTRES DONNEES TECHNIQUES VOIR PRODUCT SPECIFICATION
PER ULTERIORI DATI TECNICI VEDERE SPECIFICA DI PRODOTTO
} 472 195 040 0 (CODE 635)

TORQUE FOR CONNECTIONS
ANZUGSMOMENT FUER VERSCHLUSSSCHRAUBEN
COUPLE DE SERRAGE DES RACCORDS
COPPIA DI SERRAGGIO DEI RACCORDI
} M16×1.5: $M_{max.}$= 34 Nm
M22×1.5: $M_{max.}$= 53 Nm

GENERAL SPECIFICATION: JED-334								
FURTHER TECHNICAL DATA:								
DOC. CODE:			SHEET:		TO			
GENERAL TOLERANCES								
CLASS 1)		RANGE OF NOMINAL DIMENSIONS [± mm] ≤50	>50 ≤180	>180 ≤400	>400			
FINE		0,5	1,0	1,5	2,0	± 3°	061515	1× C 96-07-22
MEDIUM	×	1,0	2,0	3,0	4,0		054533	3× B 94-04-28
COARSE		2,0	3,5	5,0	6,5		051963	4× A 93-08-17
TAPPED HOLES ACC. ISO 4039 / JED-152							DCN-NO.	REV. DATE
1) TOLERANCE CLASS APPLIED CROSSMARKED								

CADAM-DRAWING COPYRIGHT
DATE / SIGNATURE
DRAWN: BRINK 93-02-22 MENZE
CHECKED: KIEL 93-02-22 HOEFLER
STANDARDIZATION:

WABCO

ABS-RELAY MODULATOR
ABS-RELAISVENTIL
ABS-VALVE RELAIS
ABS-VALVOLA RELE

MASS	SCALE	PRODUCT IDENTIFICATION NO.	DOC. CODE	SHEET
KG	1:1	472 195 040 0	605	1/1
SIZE A 1	T.R.I. 141/140		SHAPE CODE	REPLACEMENT FOR

100mm

EXPERT CODE 7 6 0 PRODUCT TYPE 0 2

TOUTE COMMUNICATION OU REPRODUCTION DE CE DOCUMENT, TOUTE EXPLOITATION OU COMMUNICATION DE SON CONTENU NON EXPRESSEMENT AUTORISEE DOIT ETRE SANCTIONNEE. TOUS DROITS DE PROPRIETE INDUSTRIELLE RESERVES.
NON È PERMESSO CONSEGNARE A TERZI O RIPRODURRE QUESTO DOCUMENTO, NE UTILIZZARE IL CONTENUTO O RENDERLO COMUNQUE PUBBLICO. TUTTI I DIRITTI DI PROPRIETÀ INTELLETTUALE SONO RISERVATI.
DIESES DOKUMENT DARF OHNE UNSERE AUSDRUCKLICHE ZUSTIMMUNG WEDER VERVIELFÄLTIGT NOCH DRITTEN ZUGÄNGLICH GEMACHT WERDEN. ALLE RECHTE FÜR DEN FALL DER PATENTERTEILUNG ODER EINTRAGUNG EINES GEBRAUCHSMUSTERS VORBEHALTEN.
THIS DOCUMENT MAY NOT BE REPRODUCED OR GIVEN TO OTHERS AND THE USE OF COMMUNICATION OF THE CONTENTS THEREOF IS NOT PERMITTED WITHOUT AUTHORITY. ALL RIGHTS RESERVED IN THE EVENT OF GRANT OF A PATENT OR REGISTRATION OF A UTILITY MODEL OR DESIGN.
THIS DOCUMENT IS THE SUBJECT OF COPYRIGHT.