| | MATERIAL<br>WERKSTOFF | SURFACE PROTECTION<br>OBERFLAECHENSCHUTZ |
|---|---|---|
| I | Al-casting alloy | Chromating |
| II | Al-casting alloy | Chromating |
| III | Al-casting alloy | Chromating |
| IV | Steel | Zinc chrome coating |
| V | PA6.22 GF27 MINERAL | - |
| VI | Copper - Zinc alloy | Tin coating |
| VII | Steel | Zinc nickel coating |

| | |
|---|---|
| <CI> CUSTOMER INTERFACE 8 | |
| SOCKET<br>GERAETESTECKDOSE | 894 590 154 2<br>(DOC. 653) |
| ELECTRICAL CONTROL<br>ELEKTRISCHER STEUERANSCHLUSS | DIN 72585-A1-3.1-Sn/K1 <CI> |

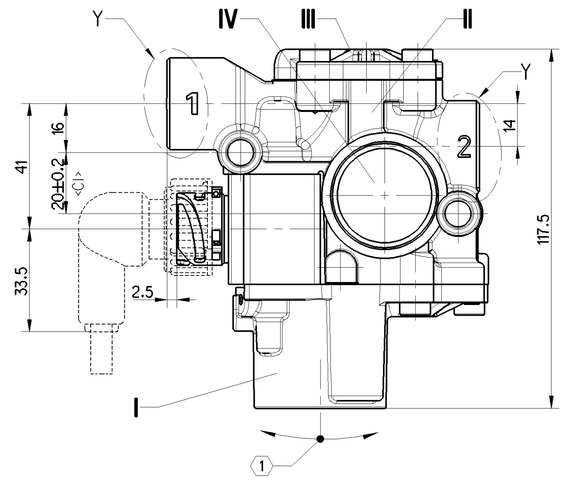


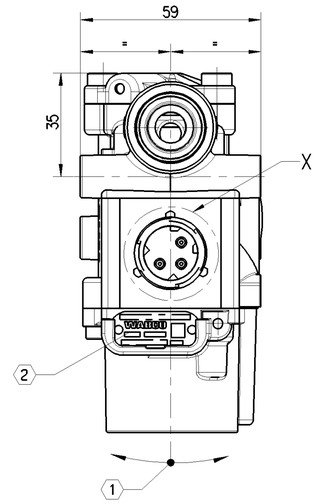


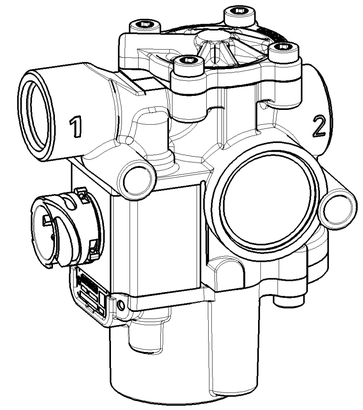


2:1

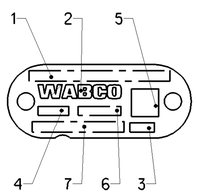


| | |
|---|---|
| 1 | CUSTOMER NO. OR COUNTRY OF ORIGIN<br>KUNDEN-NR. kZ ODER WARENURSPRUNGSLAND |
| 2 | WABCO LOGO<br>WABCO LOGO |
| 3 | RESPONSIBLE PRODUCTION (PRI)<br>VERANTWORTUNGSVOLLE PRODUKTION |
| 4 | DATE OF MANUFACTURE (WWYY)<br>HERSTELLDATUM (WWJJ) |
| 5 | DATA CODING (IF REQUESTED)<br>DATENCODIERUNG (AUF WUNSCH) |
| 6 | OPTIONAL<br>BELIEBIG |
| 7 | WABCO IDENTIFICATION NUMBER<br>WABCO IDENTIFIKATIONS-NUMMER |

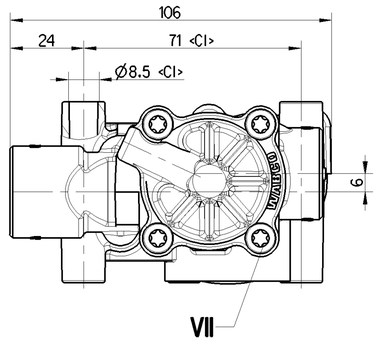


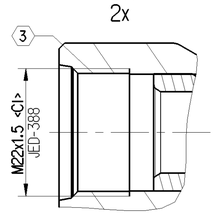


Y
2:1
2x

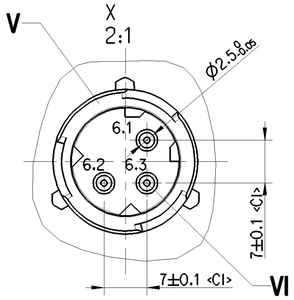


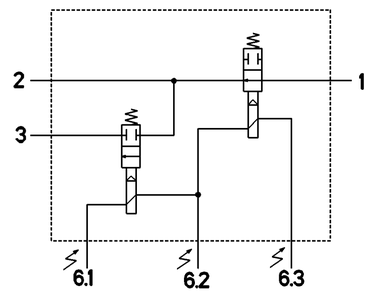


1 SUPPLY OF ENERGY
ENERGIEZUFTLUSS

2 DELIVERY OF ENERGY
ENERGIEABFLUSS

3 EXHAUST
ENTKLUEFTUNG

ELECTRICAL CONTROL (SOLENOID)
ELEKTRISCHER STEUERANSCHLUSS (MAGNET)

6.1 EXHAUST SOLENOID
AUSLASSMAGNET

6.2 GROUND
MASSE

6.3 INLET SOLENOID
EINLASSMAGNET

| | | |
|---|---|---|
| 1 | ADMISSIBLE INSTALLATION POSITION<br>ZULAESSIGE EINBAULAGE | ±30° |
| 2 | IDENTIFICATION MARKING AREA SEE DOC. CODE 922<br>IDENTIFIZIERUNG MARKIERUNGSBERICH SIEHE DOC. CODE 922 | |
| 3 | SUITABLE FOR:<br>GEEIGNET FUER: | VOSS 230/<br>VOSS 232/<br>NG12 |

| | |
|---|---|
| WORKING MEDIUM<br>ARBEITSMEDIUM | AIR<br>LUFT |
| NOMINAL VOLTAGE<br>NENNSPANNUNG | $U_N$ = 24 V DC |
| NOMINAL CURRENT<br>NENNSTROM | $I_N \leq 1.65$ A |
| SERVICE CONDITION<br>BETRIEBSART | DISCONTINOUS SERVICE ED 20%/ 5 min<br>AUSSETZBETRIEB |
| TYPE OF PROTECTION<br>SCHUTZART | COMPLETE DEVICE WITH MOUNTED COUPLING 6K9K<br>KOMPLETTES GERAET MIT MONTIERTER KUPPLUNG |
| WORKING PRESSURE<br>BETRIEBSDRUCK | pe = MAX. 11 bar |
| THERMAL RANGE OF APPLICATION<br>THERMISCHER ANWENDUNGSBEREICH | -40°C....+80°C |
| FOR FURTHER TECHNICAL DATA SEE PRODUCT SPECIFICATION<br>WEITERE TECHNISCHE DATEN SIEHE PRODUKT SPEZIFIKATION | 472 195 055 0<br>(CODE 435) |

C

General Specification: ISO 8015, JED-334-1, Size ISO 14405 LP
Further Technical Data:
Doc. Code: Sheet: To

General Tolerances JED-261

| Class 1) | Range of nominal dimensions in mm ≤ 50 | > 50 ≤ 180 | > 180 ≤ 400 | > 400 | ∢ |
|---|---|---|---|---|---|
| Fine | ±0.5 | ±1 | ±1.5 | ±2 | ±3° |
| Medium | ±1 | ±2 | ±3 | ±4 | |
| Coarse | ±2 | ±3.5 | ±5 | ±6.5 | |

Tapped Holes acc. O
1) Tolerance Class Applied Crossmarked

Copyright ZF®

| Date | Signature |
|---|---|
| Drawn 2023-08-18 | Olszewski |
| Checked 2023-08-22 | Bialon |

Dimensions in mm

SOLENOID MODULATOR VALVE

| Mass | Scale | Material No. | Date of first issue: 2023-07-24 | | |
|---|---|---|---|---|---|
| 0.68 kg | 1:1 (2:1) | 472 195 055 0 | Doc.Code 005 | Language ML | Sheet 1/1 |
| Size A 1 | CAD System CREO | ECN-No. 512593 | Revision 1x C | Techn. Resp. 6330_SV | Replacement for - |

100mm

Tout Communication ou reproduction de ce document, toute exploitation ou communication de son contenu sont interdites, sauf autorisation écrite. Tous droits de propriété industrielle réservés, notamment en matière de brevets et de modèles.

Weitergabe sowie Vervielfältigung dieser Unterlage, Verwertung und Mitteilung ihres Inhalts nicht gestattet, soweit nicht ausdrücklich zugestanden. Zuwiderhandlungen verpflichten zu Schadenersatz. Alle Rechte vorbehalten für Patent-, Gebrauchsmuster- oder Geschmacksmustereintragung.

Non è permesso consegnare a terzi o riprodurre questo documento, né utilizzare il contenuto o rendere comunque noto a terzi senza esplicita autorizzazione. Tutti i diritti derivanti da brevetto o modello sono riservati.

Copying of this document and giving it to others and the use or communication of the contents thereof, are forbidden without express authority. Offenders are liable to the payment of damages. All rights are reserved in the event of the grant of patent or registration of a utility model or design. This document is the subject of copyright.