ELECTRICAL CONTROL
ELEKTRISCHER STEUERANSCHLUSS
COMMANDE ELECTRIQUE
COMMANDO ELECTRICO
} DIN 72585-A1-3.1-Sn/K1

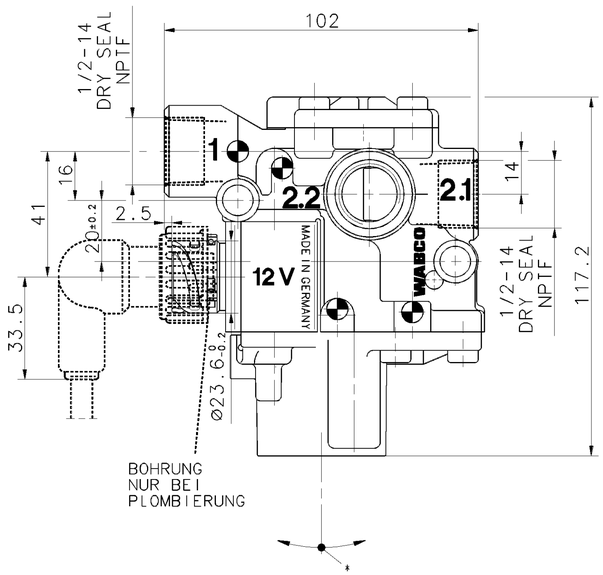


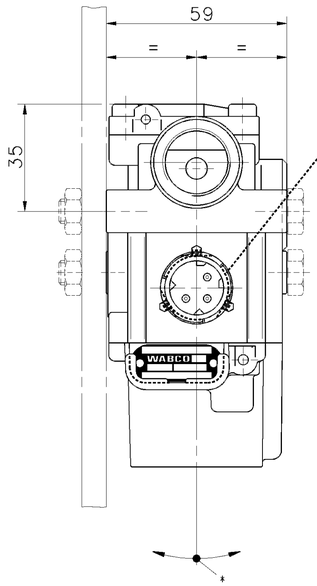


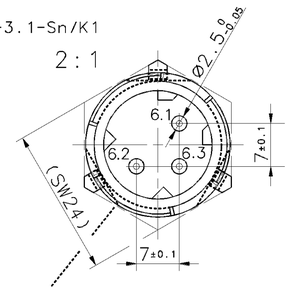


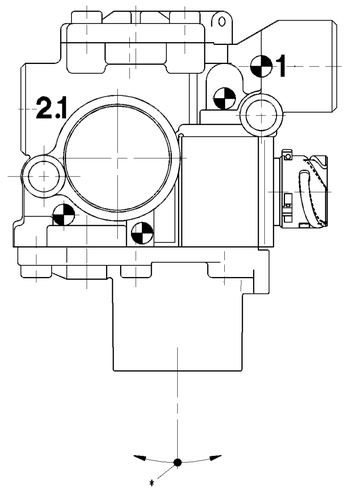


THE VALVE CORRESPONDS TO THE REGULATIONS FOR ELECTROMAGNETIC DEVICES ACCORDING TO VDE 0580
DAS GERAET ENTSPRICHT DEN BESTIMMUNGEN FUER ELEKTROMAGNETISCHE GERAETE NACH VDE 0580
LA VALVE CORRESPOND AUX CONDITIONS POUR DES APPAREILS ELECTROMAGNETIQUES SUIVANT VDE 0580
LA VALVOLA CORRISPONDE ALLE CONDIZIONI PER APPARECCHI ELECTROMAGNETICHI SECONDO VDE 0580

| | |
|---|---|
| MEDIUM<br>MEDIUM<br>FLUIDE<br>FLUIDO | AIR<br>LUFT<br>AIR<br>ARIA |
| NOMINAL VOLTAGE<br>NENNSPANNUNG<br>VOLTAGE NOMINAL<br>VOLTAGGIO NOMINALE | $U_N$ = 12 V DC$^{+20\%}_{-10\%}$ |
| SERVICE CONDITION<br>BETRIEBSART<br>CONDITION DU SERVICE<br>CONDIZIONE DI SERVISO | DISCONTINUOUS SERVICE<br>AUSSETZBETRIEB ED 5% / 5min<br>SERVICE DISCONTINUE<br>ESERCIZIO DISCONTINU |
| NOMINAL CURRENT<br>NENNSTROM<br>COURANT NOMINAL<br>CURRENTE NOMINALE | $I_N \leq 2.22$ A |
| TYPE OF PROTECTION<br>SCHUTZART<br>MODE DE PROTECTION<br>TIPO DI PROTEZIONE | IP 66/69 K |
| PROTECTION CLASS<br>SCHUTZKLASSE<br>CLASSE DE PROTECTION<br>CLASSE DI PROTEZIONE | III VDE 0580 |
| WORKING PRESSURE<br>BETRIEBSDRUCK<br>PRESSION D'UTILISATION<br>PRESSION DI ESERCIZIO | pe = MAX.11 bar |
| THERMAL RANGE OF APPLICATION<br>THERMISCHER ANWENDUNGSBEREICH<br>GAMME D'APPLICATION THERMIQUE<br>CAMPO DI APPLICAZIONE THERMICA | -40°C....+80°C |
| * ADMISSIBLE INSTALLATION POSITION<br>ZULAESSIGE EINBAULAGE<br>POSITION D'INSTALLATION ADMISE<br>POSIZIONEEDI MONTAGGIO AMMESSA | ±15° |
| SOCKET<br>GERAETESTECKDOSE<br>PRISE DE COURANT<br>PRESA DI CORRENTE | 449 413 000 0<br>449 513 000 0 |
| FOR FURTHER TECHNICAL DATA SEE PRODUCT SPECIFICATION<br>WEITERE TECHNISCHE DATEN SIEHE PRODUKT SPEZIFIKATION<br>POUR AUTRES DONNEES TECHNIQUES VOIR PRODUCT SPECIFICATION<br>PER ULTERIORI DATI TECNICI VEDERE SPECIFICA DI PRODOTTO | 472 195 095 0 |

**1** SUPPLY OF ENERGY
ENERGIEZUFLUSS
ALIMENTATION
ALIMENTATIONE

**2.1** DELIVERY OF ENERGY
ENERGIEABFLUSS
UTILISATION
MANDATA

**2.2** DELIVERY OF ENERGY
ENERGIEABFLUSS
UTILISATION
MANDATA

**3** EXHAUST
ENTLUEFTUNG
ECHAPPEMENT
SCARICO

**6.1** ELECTRICAL CONTROL (MAGNET)
**6.2** ELEKTRISCHER STEUERANSCHLUSS (MAGNET)
**6.3** COMMANDE ELECTRIQUE (AIMANT)
**6.3** COMMANDO ELECTRICO (MAGNETE)

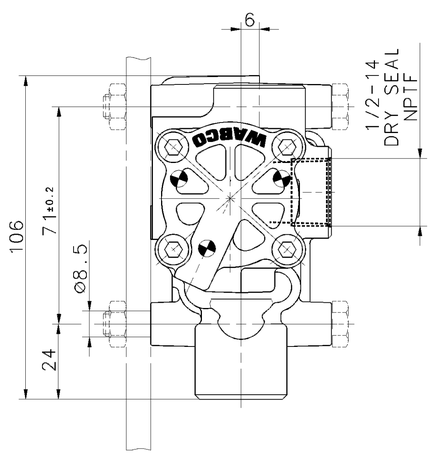


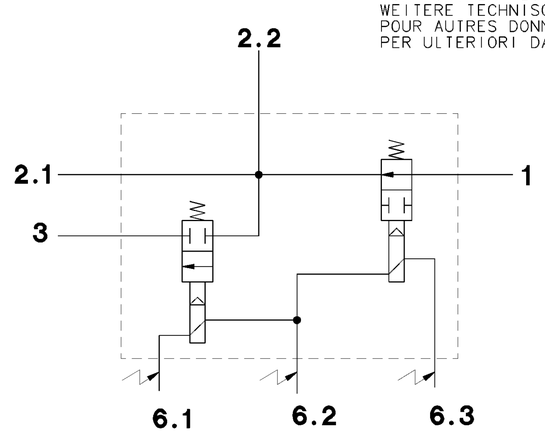



ISTE COMMUNICATION OU REPRODUCTION DE CE DOCUMENT, TOUTE EXPLOITATION OU COMMUNICATION DE SON CONTENU OU REVENDICATION DE SES DROITS DE PROPRIETE INTELLECTUELLE SONT INTERDITES SAUF AUTORISATION ECRITE. TOUS DROITS DE PROPRIETE INTELLECTUELLE, MARQUES DE FABRIQUE, BREVETS, MODELES DE UTILITE, DESSINS ET MODELES INDUSTRIELS, ETC. RESERVES. TOUTE UTILISATION ILLICITE DE CE DOCUMENT ENGAGE LA RESPONSABILITE DE SON UTILISATEUR. CE DOCUMENT EST LA PROPRIETE DE WABCO. WEITERGABE SowIE VERVIELFALTIGUNG DIESER UNTERLAGE, VERWENDUNG UND MITTEILUNG IHRES INHALTS NICHT GESTATTET, SOWEIT KEINE SCHRIFTLICHE ZUSTIMMUNG ERFOLGT. ZUWIDERHANDELNDE SIND SCHADENSERSATZPFLICHTIG. ALLE RECHTE FÜR DEN FALL DER PATENTERTEILUNG ODER EINTRAGUNG VON GEBRAUCHSMUSTERN VORBEHALTEN. WABCO IST INHABER DER EINFACHEN UND DER ERWEITERTEN URHEBERRECHTE AN DIESEM DOKUMENT.

NON E PERMESSO CONSEGNARE A TERZI O RIPRODURRE QUESTO DOCUMENTO, NE UTILIZZARNE IL CONTENUTO O RIVENDICARE I DIRITTI DI PROPRIETÀ INTELLETTUALE. TUTTI I DIRITTI DI PROPRIETÀ INTELLETTUALE, MARCHI DI FABBRICA, BREVETTI, MODELLI DI UTILITÀ, DISEGNI E MODELLI INDUSTRIALI, ECC. RISERVATI. QUALSIASI UTILIZZO ILLECITO DI QUESTO DOCUMENTO COMPORTA LA RESPONSABILITÀ DI CHI LO UTILIZZA. QUESTO DOCUMENTO È PROPRIETÀ DI WABCO. COPYING OF THIS DOCUMENT AND GIVING IT TO OTHERS AND THE USE OR COMMUNICATION OF THE CONTENTS THEREOF ARE FORBIDDEN WITHOUT EXPRESS AUTHORITY. OFFENDERS ARE LIABLE TO PAY DAMAGES. ALL RIGHTS ARE RESERVED IN THE EVENT OF THE GRANT OF A PATENT OR REGISTRATION OF A UTILITY MODEL OR DESIGN. THIS DOCUMENT IS THE SUBJECT OF COPYRIGHT.


| | | | | | |
|---|---|---|---|---|---|
| GENERAL SPECIFICATION: | | JED-334 | | | |
| FURTHER TECHNICAL DATA: | | | | | |
| DOC. CODE: | | SHEET: | TO | | |
| GENERAL TOLERANCES | | | | | |
| CLASS 1) | RANGE OF NOMINAL DIMENSIONS ( ± mm ) ≤50 | >50 ≤180 | >180 ≤400 | >400 | ∢ |
| FINE | 0,5 | 1,0 | 1,5 | 2,0 | |
| MEDIUM | 1,0 | 2,0 | 3,0 | 4,0 | ± 3° |
| COARSE × | 2,0 | 3,5 | 5,0 | 6,5 | |
| TAPPED HOLES ACC. ISO 4039 / JED-152 | | | | | |
| 1) TOLERANCE CLASS APPLIED CROSSMARKED | | | | | |

DCN-NO. | REV. | DATE

| | | | |
|---|---|---|---|
| CADAM-DRAWING COPYRIGHT | | WABCO | |
| DATE | SIGNATURE | | |
| 00-05-10 | DRAWN: HARNISCHM | SOLENOID MODULATOR VALVE<br>MAGNETREGELVENTIL<br>ELECTROVALVE MODERABLE<br>VALVOLA DI REGULAZIONE MAGNETICA | |
| 00-05-10 | CHECKED: HOEFLER | | |
| | STANDARDIZATION: | | |
| MASS 0.63 KG | SCALE 1:1 | PRODUCT IDENTIFICATION NO. 472 195 095 0 | DOC. CODE 605 / SHEET 1/1 |
| SIZE A 1 | I.R.I. 141 | | SHAPE CODE / REPLACEMENT FOR |

100mm

EXPERT CODE 7 6 0

PRODUCT TYPE 0 1 X

1009/016/3/04.93

605/1553