	MATERIAL	SURFACE PROTECTION
I	Steel	Zn Ni coat.
II	Aluminum	Chromated
III	PBT	
IV	Stainl.steel	
VI	PA 6.6	
VII	CuZn	Galv. Ni1 Ag1
VIII	Steel	Zn Ni coat.
IX	Aluminum	

<1> SAFETY CHARACTERISTICS	0
<2> SIGNIFICANT CHARACTERISTICS	0
<3> CUSTOMER INTERFACE	0

NECESSARY SOCKET :
ERFORDERLICHE GERAETESTECKDOSE :
PRISE DE COURANT NECESSARIA :
PRESA DI CORRENTE NECESSARIA :
DIN 72585-B1-2.1-Sn/K1

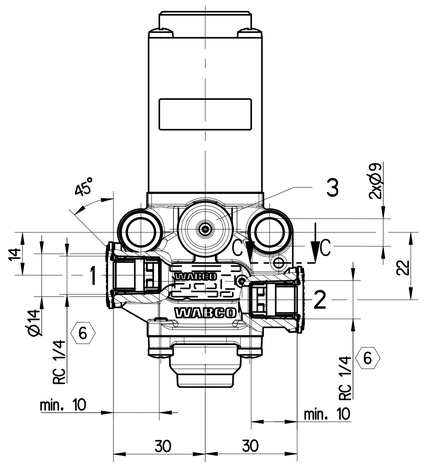

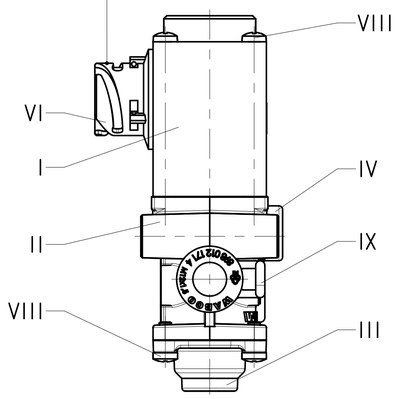

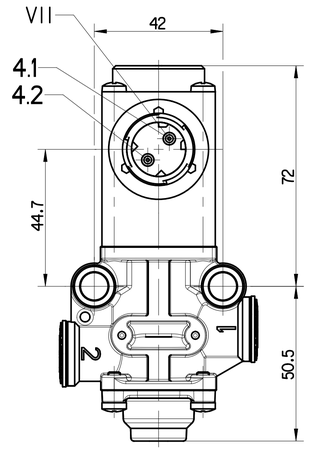

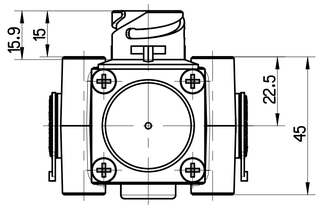

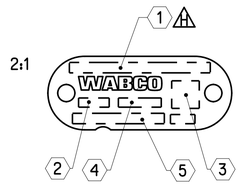

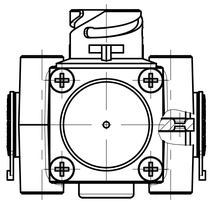

1. COUNTRY OF ORIGIN
   URSPRUNGSLAND
2. DATE OF MANUFACTURE
   HERSTELLDATUM
3. DATA CODING
4. OPTIONAL
   BELIEBIG
5. WABCO IDENTIFICATION NUMBER
   WABCO IDENTIFIKATIONS-NUMMER

ADMISSIBLE INSTALLATION POSITION
ZULAESSIGE EINBAULAGE
POSITION D'INSTALLATION ADMISE
POSIZIONE DI MONTAGGIO AMMESSA

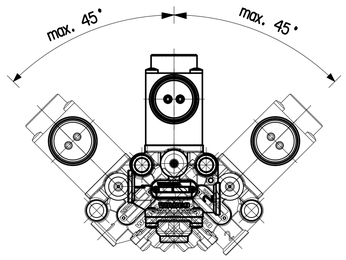

PORT :
ANSCHLUSS : 2 (bar)
ORIFICE :
ORIFIZIO :

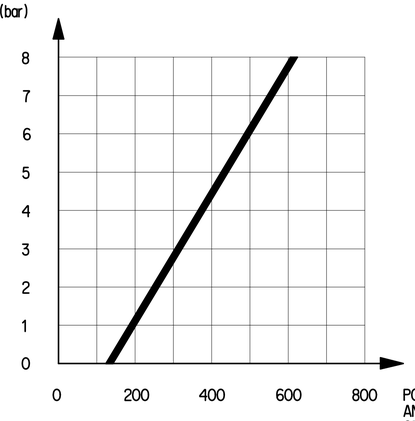

PORT :
ANSCHLUSS : 4 (mA)
ORIFICE :
ORIFIZIO :

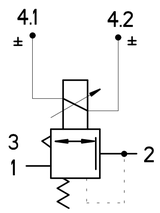

1	SUPPLY VORRAT ALIMENTATION ALIMENTAZIONE
2	DELIVERY ARBEITSLEITUNG UTILISATION MANDATA
3	EXHAUST ENTLUEFTUNG ECHAPPEMENT SCARICO
4.1	ELECTRICAL CONTROL ELEKTRISCHER STEUERANSCHLUSS COMMANDE ELECTRIQUE COMANDO ELETTRICO
4.2	

THE VALVE CORRESPONDS TO THE REGULATIONS FOR ELECTROMAGNETIC DEVICES ACCORDING TO VDE 0580
GERAET ENTSPRICHT DEN BESTIMMUNGEN FUER ELEKTROMAGNETISCHE GERAETE NACH VDE 0580
LA VALVE CORRESPOND AUX CONDITIONS POUR DES APPAREILS ELECTROMAGNETIQUES SUIVANT VDE 0580
LA VALVOLA CORRISPONDE ALLE CONDIZIONI PER APPARECCHI ELETTROMAGNETICI SECONDO VDE 0580

1.1	WORKING MEDIUM ARBEITSMEDIUM FLUIDE D'UTILISATION FLUIDO DI ESERCIZIO	AIR (CONTAINING WATER, OIL AND ALCOHOL) LUFT (WASSER, OEL- UND ALKOHOLHALTIG) AIR (CHARGE D'EAU, D'HUILE ET D'ALCOOL) ARIA (CONTENENTE ACQUA, OLIO ED ALCOOL)	
1.2	AMBIENT ENVIRONMENT UMGEBUNGSMEDIUM FLUIDE AMBIENT FLUIDO AMBIENTE	AIR (WATER- AND SALT CONTAINING LUFT (WASSER- UND SALZHALTIG) AIR (CHARGE D'EAU DE SEL) ARIA (ACQUOSO E SALIFERO)	
2.1	THERMAL RANGE OF APPLICATION UNDER NORMAL AMBIANT CONDITIONS THERMISCHER ANWENDUNGSBEREICH UNTER NORMALEN UMGEBUNGSBEDINGUNGEN PLAGE DE TEMPERATURE EN UTILISATION CONTINUE DE CAMPO D'APPLICAZIONE TERMICA NELLE NORMALI CONDIZIONE AMBIENTALI		-40°.....+100°C
2.2	SHORT TERM RESISTANCE TO HEAT KURZZEITIGE WAERMEBESTAENDIGKEIT RESISTANCE THERMIQUE TEMPORAIRE RESISTANZA TERMICA PER BREVE PERIODO		MAX. 110°C AT 1h
3.1	WORKING PRESSURE (SUPPLY) BETRIEBSDRUCK (VORRAT) PRESSION D'UTILISATION (ALIMENTATION) PRESSIONE DI ESERCIZIO (ALIMENTAZIONE)		p_1 = 5....10 bar
3.2	MAX. PERMISSIBLE WORKING PRESSURE (SUPPLY) MAX. ZULAESSIGER BETRIEBSDRUCK (VORRAT) PRESSION D'UTILISATION MAXI ADMISSIBLE (ALIMENTATION) PRESSIONE DI ESERCIZIO MAX. AMMISSIBILE (ALIMENTAZIONE)		p_1 = 11 bar
3.3	OUTPUT PRESSURE AUSGANGSDRUCK PRESSION DE SORTIE PRESSIONE D'USCITA	p_2 = 6 bar / ED = 100%	p_2 = 8 bar / ED = 20%
4	MIN. FLOW PASSAGE MIN. DURCHFLUSSOEFFNUNG MIN. ORIFICE CALIBRE MIN. PASSAGIO LIBERO	NOMINAL DIAMETER NENNWEITE DIAMETRE NOMINAL DIAMETRO NOMINALE	18.4 mm^2
4.1	PORT 1 - 2 ANSCHLUSS 1 - 2 ORIFICE 1 - 2 ORIFIZIO 1 - 2	12.6 mm^2/ NW 4	
4.2	PORT 2 - 3 ANSCHLUSS 2 - 3 ORIFICE 2 - 3 ORIFIZIO 2 -3	5 mm^2/ NW 2,5	
5	VOLTAGE SPANNUNG VOLTAGE VOLTAGGIO	$24^{+4,8}_{-2,4}$ V	
6	TYPE OF CURRENT STROMART NATURE DU COURANT NATURA DELLA CORRENTE	DIRECT CURRENT GLEICHSTROM COURANT CONTINU CORRENTE CONTINUA	
7	SERVICE CONDITION BETRIEBSART CONDITION DU SERVICE CONDIZIONE DI SERVIZIO	CONTINOUS SERVICE DAUERBETRIEB SERVICE CONTINU SERVIZIO CONTINUO	
8	MAX. CURRENT MAX. STROM COURANT MAX. CORRENTE MAX.	I_{MAX} = 0,57 A / ED = 100%	I_{MAX} = 0,75 A / ED = 20%
9	DEGREE OF PROTECTION ACC. IEC 529 SCHUTZART NACH EN 60529; IEC 529 DEGRE DE PROTECTION SUIVANT IEC 529 GRADO DI PROTEZIONE SECONDO IEC 529	IP 6K9K	
10	PROTECTION CLASS ACC. TO VDE 0580 SCHUTZKLASSE NACH VDE 0580 CLASSE DE PROTECTION SUIVANT VDE 0580 CLASSE DI PROTEZIONE SECONDO VDE 0580	III	
11	INSTALLATION LIMITATIONS EINBAUBESCHRAENKUNGEN RESTRICTIONS D'INSTALLATION LIMITAZIONE DI MONIAGGIO	MAX. DEVIATION FROM THE VERTICAL MAX. ABWEICHUNG VON DER SENKRECHTEN ECART MAX. PAR RAPPORT A LA VERTICALE DEVIAZIONE MAX. RIFERITA ALLA VERTICALE	45°
12	MAINTENANCE REQUIREMENTS WARTUNGSANFORDERUNGEN ENTRETIEN MANUTENZIONE	NONE KEINE NON NON	
6	MAX. TORQUE MAX. ANZUGSMOMENT COUPLE MAXI DE SERRAGE COPPIA MASSIMA DI SERRAGGIO	max. 30 Nm	

General Specification: ISO 8015, JED-334-1, Size ISO 14405 LP
Further Technical Data: 472 250 008 0
Doc. Code: 035 Sheet: 1 To 6

General Tolerances JED-261

Class 1)	Range of nominal dimensions in mm ≤ 50	> 50 ≤ 180	> 180 ≤ 400	> 400	∢
Fine	±0.5	±1	±1.5	±2	±3°
Medium X	±1	±2	±3	±4	
Coarse	±2	±3.5	±5	±6.5	

Tapped Holes acc. -
1) Tolerance Class Applied Crossmarked

Copyright ZF®

Date	Signature
Drawn 2024-03-28	Bai
Checked 2024-04-08	Smardz

Dimensions in mm

PROPORTIONAL VALVE
PROPORTIONAL VENTIL
VANNE PROPORTIONNELLE
VALVOLA PROPORZIONALE

Mass	Scale	Material No.	Date of first issue: 2013-09-15		
0.8 kg	1:1 (2:1)	472 250 008 0	Doc.Code -	Language ML	Sheet 1/1
Size A 1	CAD System CREO	ECN-No. 513330	Revision 5x H	Techn. Resp. 6350	Replacement for

100mm

Toute Communication ou reproduction de ce document, toute exploitation ou communication de son contenu sont interdites, sauf autorisation écrite. Tous droits de propriété industrielle réservés, notamment en matière de brevets et de modèles.

Weitergabe sowie Vervielfältigung dieser Unterlage, Verwertung und Mitteilung ihres Inhalts nicht gestattet, soweit nicht ausdrücklich zugestanden. Zuwiderhandlungen verpflichten zu Schadenersatz. Alle Rechte für den Fall der Patenterteilung oder Gebrauchsmustereintragung vorbehalten.

Non è permesso consegnare a terzi o riprodurre questo documento, né utilizzare il contenuto o renderlo comunque noto a terzi senza autorizzazione scritta. Ogni violazione obbliga al risarcimento dei danni. Tutti i diritti riservati di proprietà industriale e modelli.

Copying of this document and giving it to others and the use or communication of the contents thereof, are forbidden without express authority. Offenders are liable to the payment of damages. All rights are reserved in the event of the grant of patent or registration of a utility model or design. This document is the subject of copyright.