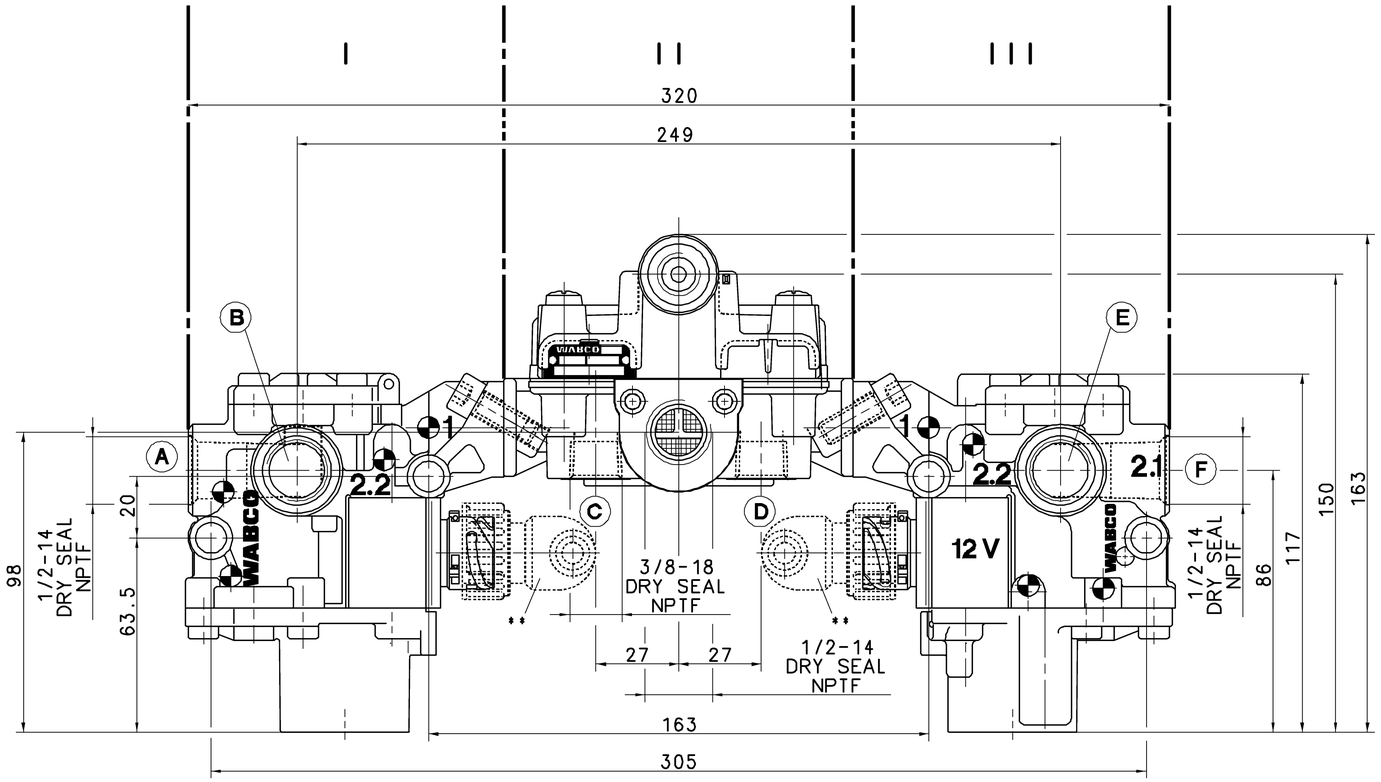

WORKING PRESSURE
BETRIEBSDRUCK
PRESSION D'UTILISATION
PRESSION DI ESERCIZIO
} pe = MAX.11 bar

NOMINAL VOLTAGE
NENNSPANNUNG
VOLTAGE NOMINAL
VOLTAGGIO NOMINALE
} U_N = 12 V DC$^{+20\%}_{-10\%}$

TYPE OF PROTECTION
SCHUTZART
MODE DE PROTECTION
TIPO DI PROTEZIONE
} IP66, IP69K
EN 60529/IEC 529

THERMAL RANGE OF APPLICATION
THERMISCHER ANWENDUNGSBEREICH
GAMME D'APPLICATION THERMIQUE
CAMPO DI APPLICAZIONE THERMICA
} -40°C....+80°C

** SOCKET
GERAETESTECKDOSE
PRISE DE COURANT
PRESA DI CORRENTE
} 449 532 000 0 (RIGHT)
449 533 000 0 (LEFT)

		I		II		III	
DELIVERY PORTS ENERGIEABFLUSS UTILISATION MANDATA	**2**	A	B	C	D	E	F
SYSTEM	IDENTIFICATION BENENNUNG DENOMINATION DENOMINAZIONE						
4S/4M	472 500 120 0 (4 psi)*	X		X			X
4S/4M	472 500 121 0 (5.5 psi)*	X		X			X
4S/4M 6S/4M	472 500 122 0 (4 psi)*	X	X	X		X	X
4S/4M 6S/4M	472 500 123 0 (5.5 psi)*	X	X	X		X	X
6S/4M+(1M) 6S/6M	472 500 124 0 (4 psi)*	X		X	X		X
6S/4M+(1M) 6S/6M	472 500 125 0 (5.5 psi)*	X		X	X		X
(A) 4S/4M 6S/4M	472 500 126 0 (5.5 psi)*	X	X	X	X	X	X

* CRACK PRESSURE
ANSPRECHDRUCK
PRESSION DE REPONSE
PRESSIONE DI RISPOSTA
} 4 psi ≙ 0.28 bar
5.5 psi ≙ 0.38 bar

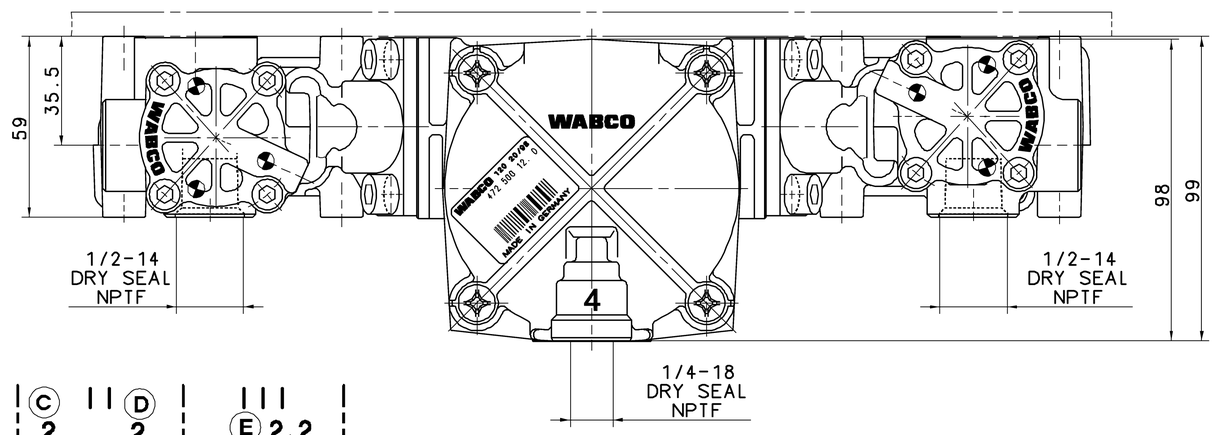

FOR FURTHER TECHNICAL DATA SEE PRODUCT SPECIFICATION
WEITERE TECHNISCHE DATEN SIEHE PRODUKT SPEZIFIKATION
POUR AUTRES DONNEES TECHNIQUES VOIR PRODUCT SPECIFICATION
PER ULTERIORI DATI TECNICI VEDERE SPECIFICA DI PRODOTTO

NUMBER NUMMER NUMERO NUMERO	PART-NO. TEILE-NR. Nº DE PIECE Nº DEL PEZZO
I	472 195 076 0
II	973 011 021 0 (4 psi)
	973 011 022 0 (5.5 psi)
III	472 195 077 0

2 : 1

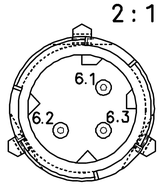

ELECTRICAL CONTROL
ELEKTRISCHER STEUERANSCHLUSS
COMMANDE ELECTRIQUE
COMMANDO ELECTRICO

DIN 72585-A1-3.1-Sn/K1

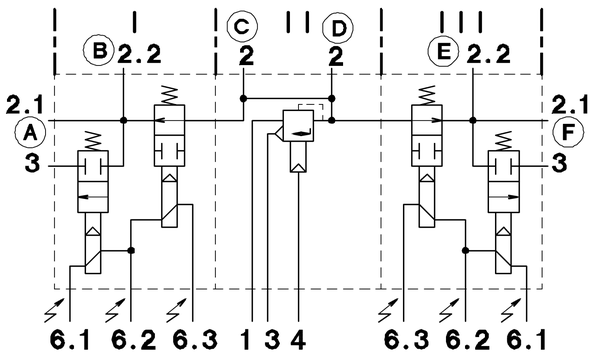

GENERAL SPECIFICATION:	JED-334		
FURTHER TECHNICAL DATA:			
DOC. CODE:	SHEET: 10		

GENERAL TOLERANCES

CLASS 1)		RANGE OF NOMINAL DIMENSIONS (± mm) ≤50	> 50 ≤180	>180 ≤400	>400
FINE		0,5	1,0	1,5	2,0
MEDIUM		1,0	2,0	3,0	4,0
COARSE	X	2,0	3,5	5,0	6,5

± 3°

TAPPED HOLES ACC. ISO 4039 / JED-152

1) TOLERANCE CLASS APPLIED CROSSMARKED

DCN-NO.	REV.	DATE
089423	1x A	04-03-02

100mm

CADAM-DRAWING COPYRIGHT

DATE	SIGNATURE
DRAWN: 98-11-20	HARNISCHM
CHECKED: 98-11-20	HOEFLER
STANDARDIZATION:	

WABCO

ABS-REAR AXLE PACKAGE
ABS BAUGRUPPE -HINTERACHSE-
ASSEMBLAGE ABS ESSIEU ARRIERE
ASSIEME ABS ASSE POSTERIORE

MASS	SCALE	PRODUCT IDENTIFICATION NO.	DOC. CODE	SHEET
1.8 KG	1:1	472 500 129 0	653	1/1
SIZE	T.R.I.		SHAPE CODE	REPLACEMENT FOR
A 1	141			

EXPERT CODE 760

PRODUCT TYPE 01

TOUTE COMMUNICATION OU REPRODUCTION DE CE DOCUMENT, TOUTE EXPLOITATION OU COMMUNICATION DE SON CONTENU OU D'UNE PARTIE SONT INTERDITES SAUF AUTORISATION ÉCRITE. TOUS DROITS DE PROPRIÉTÉ INDUSTRIELLE ET INTELLECTUELLE RÉSERVÉS.
NON È PERMESSO CONSEGNARE A TERZI O RIPRODURRE QUESTO DOCUMENTO, NE UTILIZZARE IL CONTENUTO O RENDERLO ACCESSIBILE A TERZI. TUTTI I DIRITTI DI PROPRIETÀ INTELLETTUALE E INDUSTRIALE SONO RISERVATI.
NOTHING CONTAINED HEREIN SHALL BE DEEMED TO BE A GRANT OF ANY RIGHT TO USE THIS DOCUMENT OR ANY PART THEREOF. THE DISTRIBUTION, REPRODUCTION OR DISCLOSURE OF THIS DOCUMENT OR ANY PART THEREOF WITHOUT OUR EXPRESS WRITTEN CONSENT IS PROHIBITED. ALL RIGHTS, INCLUDING RIGHTS CREATED BY PATENT GRANT OR REGISTRATION OF A UTILITY MODEL OR DESIGN, ARE RESERVED.
THIS DOCUMENT IS THE SUBJECT OF COPYRIGHT.