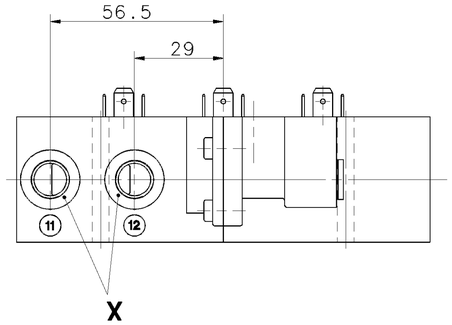

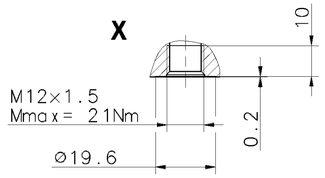

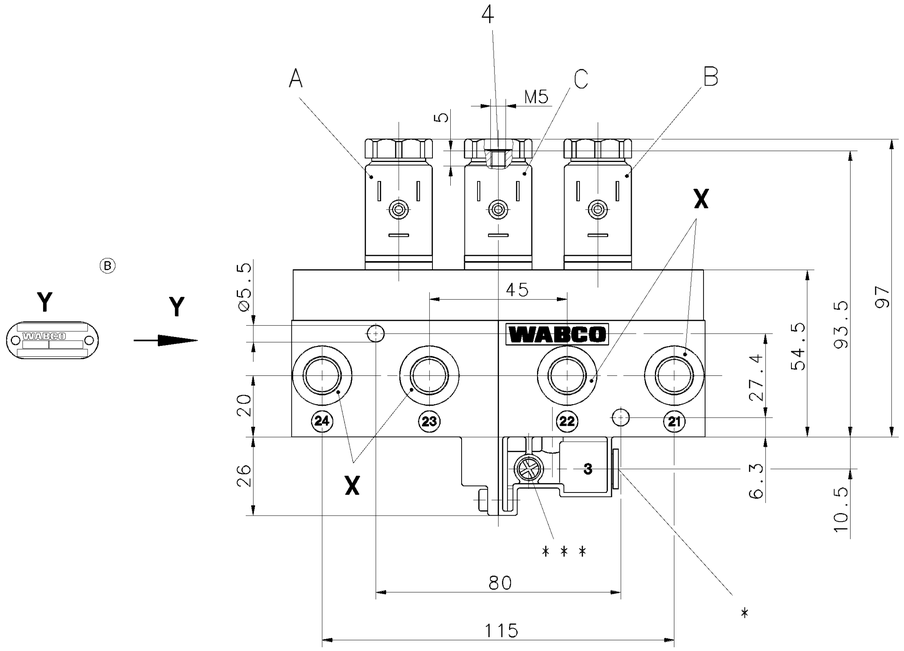

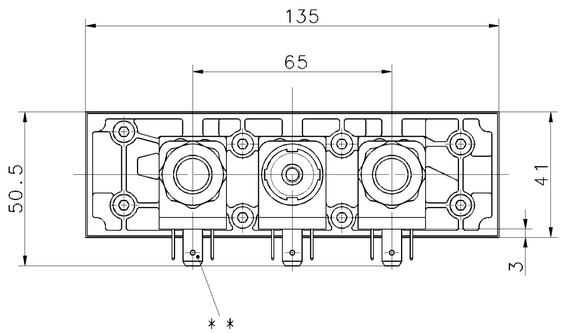

	MEDIUM MEDIUM FLUIDE FLUIDO	: AIR : LUFT : AIR : ARIA
	NOMINAL DIAMETER NENNWEITE DIAMETRE NOMINAL DIAMETRO NOMINALE	: 12.6mm² (≙Ø4 mm)
	WORKING PRESSURE/CONTROL PRESSURE BETRIEBSDRUCK/STEUERDRUCK PRESSION D'UTILISATION/PRESSION DE COMMANDE PRESSIONE DI ESERCIZIO/PRESSIONE DI COMANDO	: P_e = 5....10 bar
	VOLTAGE SPANNUNG TENSION TENSIONE	: $24^{+4.8}_{-2.4}$ V
	TYPE OF CURRENT STROMART NATURE DU COURANT NATURA DELLA CORRENTE	: DIRECT CURRENT : GLEICHSTROM : COURANT CONTINU : CORRENTE CONTINUA
	SERVICE CONDITION BETRIEBSART CONDITION DU SERVICE CONDIZIONE DI SERVIZIO	: INTERMITTENT DUTY : AUSSETZBETRIEB : SERVICE INTERMITTENT ED 15%/5 MIN : FUNZIONAMENTO INTERMITTENTE
	RATED CURRENT NENNSTROM COURANT NOMINAL CORRENTE NOMINALE	: 0.115 A
	DEGREE OF PROTECTION SCHUTZART DEGRE DE PROTECTION GRADO DI PROTEZIONE	: DIN 40050
*	FOR PIPE FUER ROHR POUR TUBE 8×1 PER TUBO	
* *	WITH PLUG MIT STECKER AVEC FICHE 894 100 470 2 CON SPINA	: IP 65
	WITH RECEPTACLE MIT STECKHUELSE AVEC CLIP FEMELLE 6.3 DIN 46247 CON TERMINALE FEMMINA	: IP 00
Ⓑ * * *	THROTTLE POSITION IN CONDITION AS DELIVERED STELLUNG DER DROSSELSCHRAUBE IM LIEFERZUSTAND	: OPTIONAL : BELIEBIG
	THERMAL RANGE OF APPLICATION THERMISCHER ANWENDUNGSBEREICH GAMME D'APPLICATION THERMIQUE CAMPO TERMICO D'APPLICAZIONE	: -25°....+80°C
	INSTALLATION POSITION EINBAULAGE POSITION D' INSTALLATION POSIZIONE DI MONTAGGIO	: OPTIONAL : BELIEBIG : A VOLONTE : A SCELTA

11, 12 SUPPLY OF ENERGIE OR PORT PRESSURE SWITCH
ENERGIEZUFLUSS ODER ANSCHLUSS DRUCKSCHALTER
APPORT D'-ENERGIE ORIFICE CONTACTEUR ELECTROPNEUMATIQUE
ALIMENTAZIONE DI ENERGIA ORIFIZIO INTERRUTTORE PNEUMATICO DI CORRENTE

21, 22, 23, 24 DELIVERY OF ENERGY
ENERGIEABFLUSS
SORTIE D'ENERGIE
PORTATA DI ENERGIA

3 EXHAUST
ENTLUEFTUNG
ECHAPPEMENT
SCARICO

4 CONTROL PORT
STEUERANSCHLUSS
ORIFICE DE COMMANDE
ORIFIZIO DI COMANDO

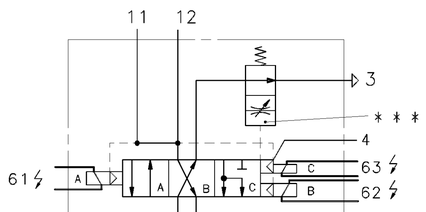

GENERAL SPECIFICATION: JED-334					
FURTHER TECHNICAL DATA:					
DOC. CODE:		SHEET: 10			
GENERAL TOLERANCES					
CLASS 1)	RANGE OF NOMINAL DIMENSIONS (± mm) ≤50	> 50 ≤180	>180 ≤400	>400	
FINE	0,5	1,0	1,5	2,0	
MEDIUM X	1,0	2,0	3,0	4,0	± 3°
COARSE	2,0	3,5	5,0	6,5	
TAPPED HOLES ACC. ISO 4029 / JED-152					
1) TOLERANCE CLASS APPLIED CROSSMARKED					

DCN-NO.	REV.	DATE
072730	2×B	06-02-02
058760	2×A	98-11-19

CADAM-DRAWING COPYRIGHT	
DATE	SIGNATURE
98-01-22	DRAWN: VOGES
98-01-22	CHECKED: STRILKA
STANDARDIZATION:	

WABCO

DIRECTIONAL CONTROL SOLENOID VALVE 4/3
4/3 WEGE-MAGNETVENTIL
DISTRIBUTEUR ELECTROVANNE 4/3
DISTRUBUTORE ELETTROVALVOLA 4/3

MASS	SCALE	PRODUCT IDENTIFICATION NO.	DOC. CODE	SHEET
1.5_{KG}	1:1	472 600 022 0	605	1/1
SIZE	T.R.I.		SHAPE CODE	REPLACEMENT FOR
A 1	140			

100mm

EXPERT CODE 7 1 9

PRODUCT TYPE X X X

TOUTE COMMUNICATION OU REPRODUCTION DE CE DOCUMENT, TOUTE EXPLOITATION OU COMMUNICATION DE SON CONTENU NON E PERMESSO CONSEGNARE A TERZI O RIPRODURRE QUESTO DOCUMENTO, NE UTILIZZARNE IL CONTENUTO O REN-NON SONT INTERDITES SAUF AUTORISATION ECRITE. TOUS DROITS DE PROPRIETE INTELLECTUELLE ABUS DERNE ZUGANGLICH MACHEN OHNE VORHERIGE SCHRIFTLICHE ERLAUBNIS. ALLE RECHTE FUER EVTL. PATENT- UND GEBRAUCHSMUSTERANMELDUNGEN VORBEHALTEN.

COPYING OF THIS DOCUMENT AND GIVING IT TO OTHERS AND THE USE OR COMMUNICATION OF THE CONTENTS THEREOF ARE PROHIBITED WITHOUT EXPRESS WRITTEN AUTHORIZATION. ALL RIGHTS RESERVED FOR THE ENTITY OF THE SUBSTANTIVE RIGHT OF PATENT OR REGISTRATION OF A UTILITY MODEL OR DESIGN. THIS DOCUMENT IS THE SUBJECT OF COPYRIGHT.

V020/016/3/04.93

605/653