THE VALVE CORRESPONDS TO THE REGULATIONS FOR ELECTROMAGNETIC DEVICES ACCORDING TO VDE 0580

1	WORKING MEDIUM	AIR JED-848
2	AMBIENT MEDIUM	AIR (CONTAINING WATER AND SALT)
3	THERMAL RANGE OF APPLICATION UNDER NORMAL AMBIENT CONDITIONS	-40°C ... +65°C
4	SHORT TERM RESISTANCE TO HEAT	MAX 1h AT 110°C
5	WORKING PRESSURE (SUPPLY)	Pe = 5...12 bar
6	MAX DYNAMIC PRESSURE (DELIVERY)	Pe = 20 bar
7	MIN FLOW PASSAGE PORT 11, 22, 23 PORT 31 PORT 25, 26, 27 PORT 32	NOMINAL DIAMETER 46.56 mm² (=Ø 7.7 mm) 100.6 mm² (=Ø 11.3 mm) 46.56 mm² (=Ø 7.7 mm) 103.9 mm² (=Ø 11.5 mm)
8	TYPE OF CURRENT	DIRECT CURRENT
9	OPERATING VOLTAGE	9.8V - 15V (12V) WITH RESTRICTED DUTY CYCLE <10V AND >15V. REFER TO PRODUCT SPECIFICATION
10	SECURITY AGAINST THE CONFUSING OF POLES	EXISTING
11	RATED CURRENT AT ROOM TEMERATURE	I = 0.625 A
12	PROTECTION CLASS	III
13	DEGREE OF PROTECTION COMPLETE DEVICE WITH MOUNTED COUPLING ELECTRIC TERMINALS WITHOUT COUPLING	IP 6K 9K IP 6K 8
14	MAINTENANCE REQUIREMENTS	NONE

<1> SAFETY CHARACTERISTICS	0
<2> SIGNIFICANT CHARACTERISTICS	0
<CI> CUSTOMER INTERFACE	7

	MATERIAL	SURFACE PROTECTION
I	PA 6.6	
II	Al	Cr 3
III	8.8	ZN-NI
IV	Al	
V	PA 6.6 35%GF	
VI	PPA 50%GF	
VII	Al	Cr 3
VIII	8.8	ZN-NI
IX	PA 6.6 35%GF	
X	SI	painted
XI	CuZn	Sn
XII	BRASS	

CONNECTOR ACCORDING TO INTERFACE DRAWING:	TYCO HDSCS 4x 2.8 CODING B 858 000 852 4 DOC. CODE 007. REV. "E"
TYCO INTERFACE DRAWING:	C-114_18739-1, REV. "C"
CODING:	B

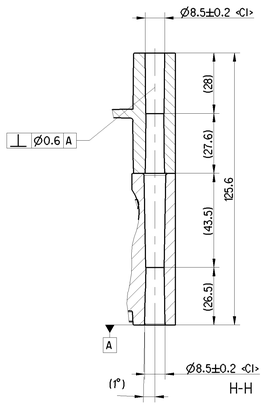

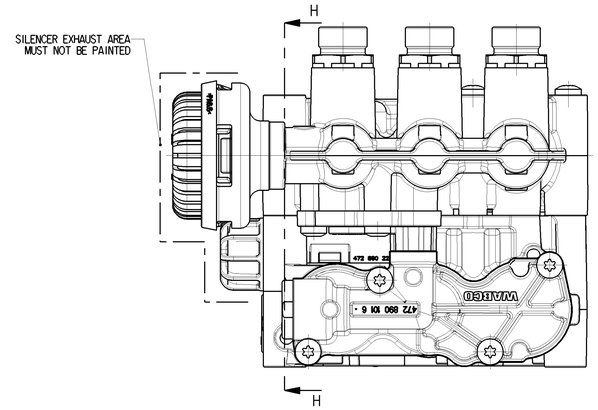

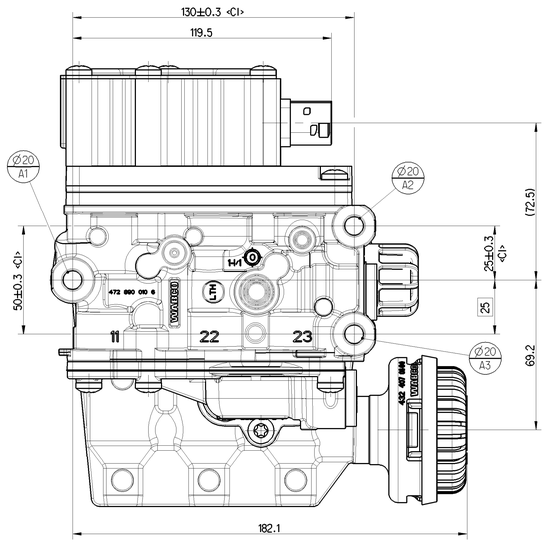

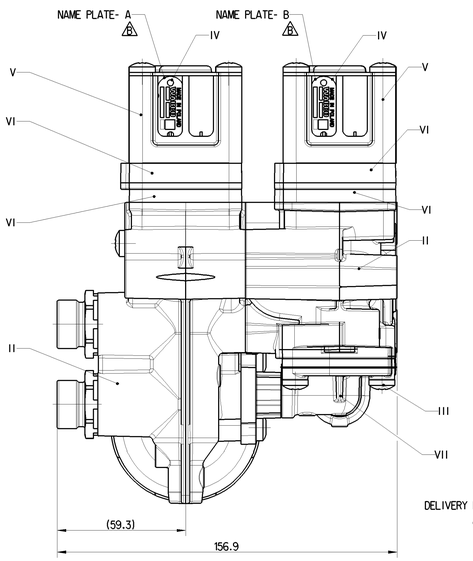

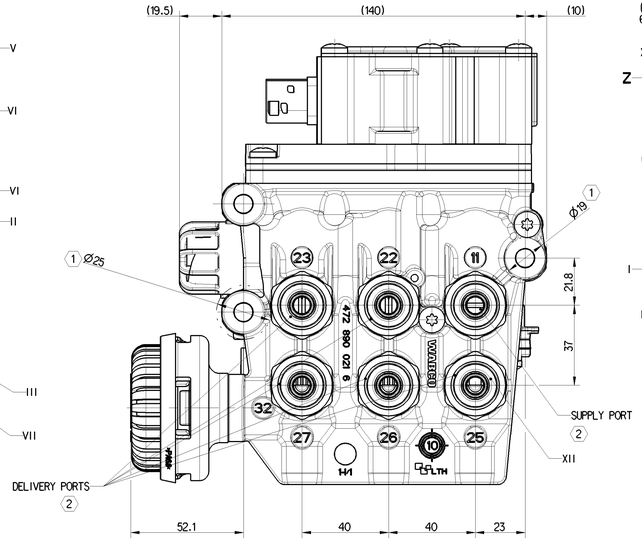

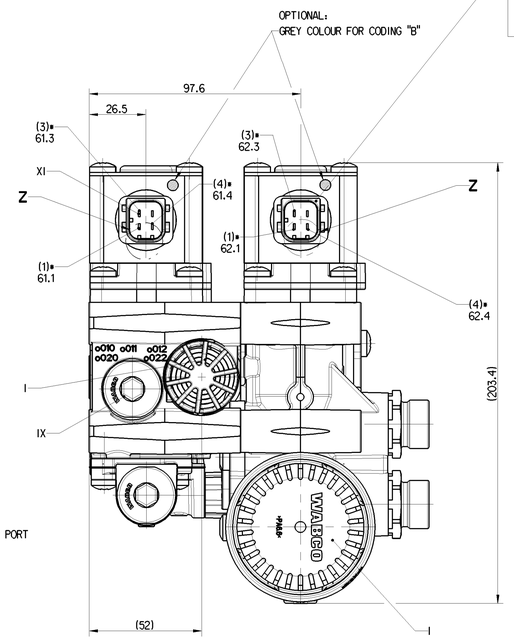

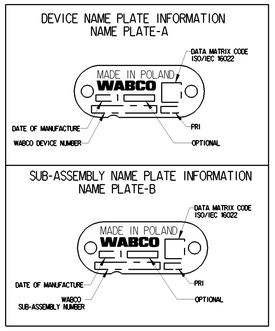

NOTE:

1. CLEARANCE FOR SOCKET WRENCH
2. FITTING DETAILS:
   TUBE SIZE- 12x1.5 <CI>, PUSH IN LENGTH - 25mm <CI>
   HEX 28, THREAD-M22x1.5, TIGHTENING TORQUE 34 TO 40 Nm
3. TIGHTENING TORQUE: 31Nm MAX

PERMISSIBLE INSTALLATION POSITION

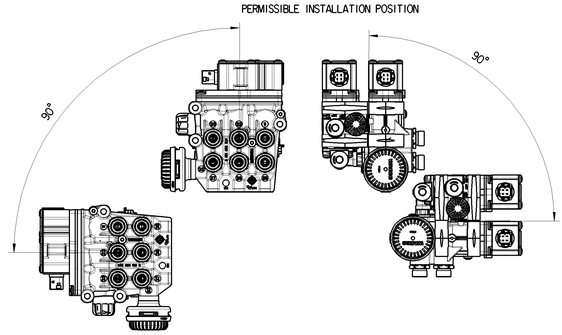

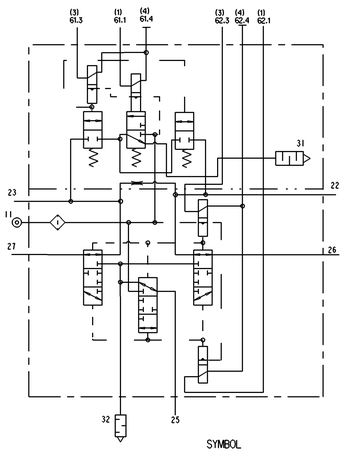

SYMBOL

11	SUPPLY
22, 23, 25, 26, 27	DELIVERY
32, 31	EXHAUST
62.1, 62.3, 62.4	ELECTRICAL CONTROL

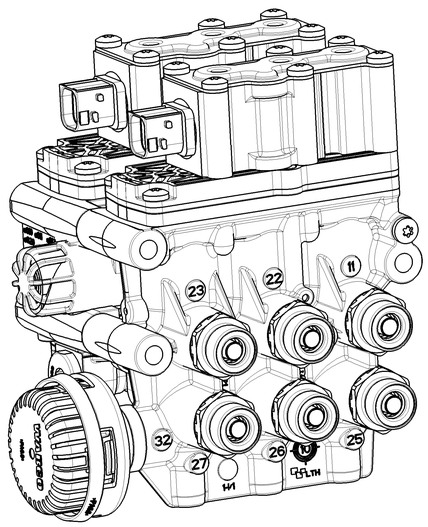

1:1

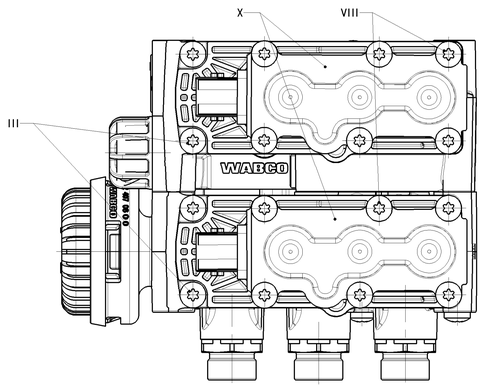

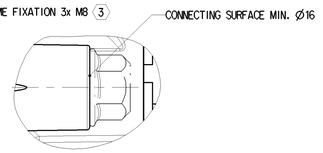

General Specification: ISO 8015, JED-334-1, Size ISO 14405 LP								Copyright ZF®	
Further Technical Data: 472 890 114 0								Date	Signature
Doc. Code: 0315			Sheet: 1 To 25					2023-09-28	Drawn: Bologo
General Tolerances JED-261								2023-10-13	Checked: Piskadło
		Range of nominal dimensions in mm						Dimensions in mm	
Class	11	≥ 0.5	> 50 ≤ 180 ≤ 80	≤ 400	> 400			Mass: 3.931 kg	Scale: 1:1 (2:1)
Fine		±0.5	±1	±1.5	±2			Size: A 0	CAD System: CREO
Medium	X	±1	±2	±3	±4	±3°			
Coarse		±2	±3.5	±5	±6.5				
Tapped Holes acc. ***									
11 Tolerance Class Applied Crossmarked									

SOLENOID VALVE

Material No.	Date of first issue: 2020-12-21
472 890 116 0	Doc.Code: 005 / Language: EN / Sheet: 1/1

ECN-No.	Revision	Techn. Reg.	Replaced for
515293	3 x B	6673	-

100mm

Tale documento è la proprietà di la società, tale restrizione è applicabile da ciascuno cui interessa, ad ottenere il controllo o ricevere proposte volte a tali scopi. Se ricevuto per trasmissione, deve informare la società che ne è proprietaria. Non è consentito riprodurre, copiare, usare o divulgare a terzi senza il consenso della società proprietaria. Se ricevuto per trasmissione, deve distruggerlo, senza conservarne alcuna copia, sia cartacea, sia elettronica.

This document is the property of the company, such restriction is applicable to anyone concerned, or obtaining a control or receiving proposals aimed at such. If received by transmission, it must inform the company that is the owner. It is not permitted to reproduce, copy, use or disclose to third parties without the consent of the company owner. If received by transmission, destroy it, without keeping any copy, both paper and electronic.

Diese Urkunde ist das Eigentum der Firma, sie darf weder ganz oder teilweise noch anderen Personen zugänglich gemacht werden, noch darf sie ohne Zustimmung der Firma, die sie besitzt, verwendet oder vervielfältigt oder Dritten zur Kenntnis gegeben werden. Wenn sie per Post erhalten wurde, ist das Unternehmen zu informieren, dass sie das Eigentum des Unternehmens ist. Es ist nicht zulässig, sie ohne Zustimmung des Eigentümers zu reproduzieren, zu kopieren, zu verwenden oder Dritten zur Kenntnis zu geben. Wenn sie per Post erhalten wurde, ist sie zu vernichten, ohne eine Kopie, sowohl in Papier- als auch in elektronischer Form, zu behalten.