TIRAGE du :

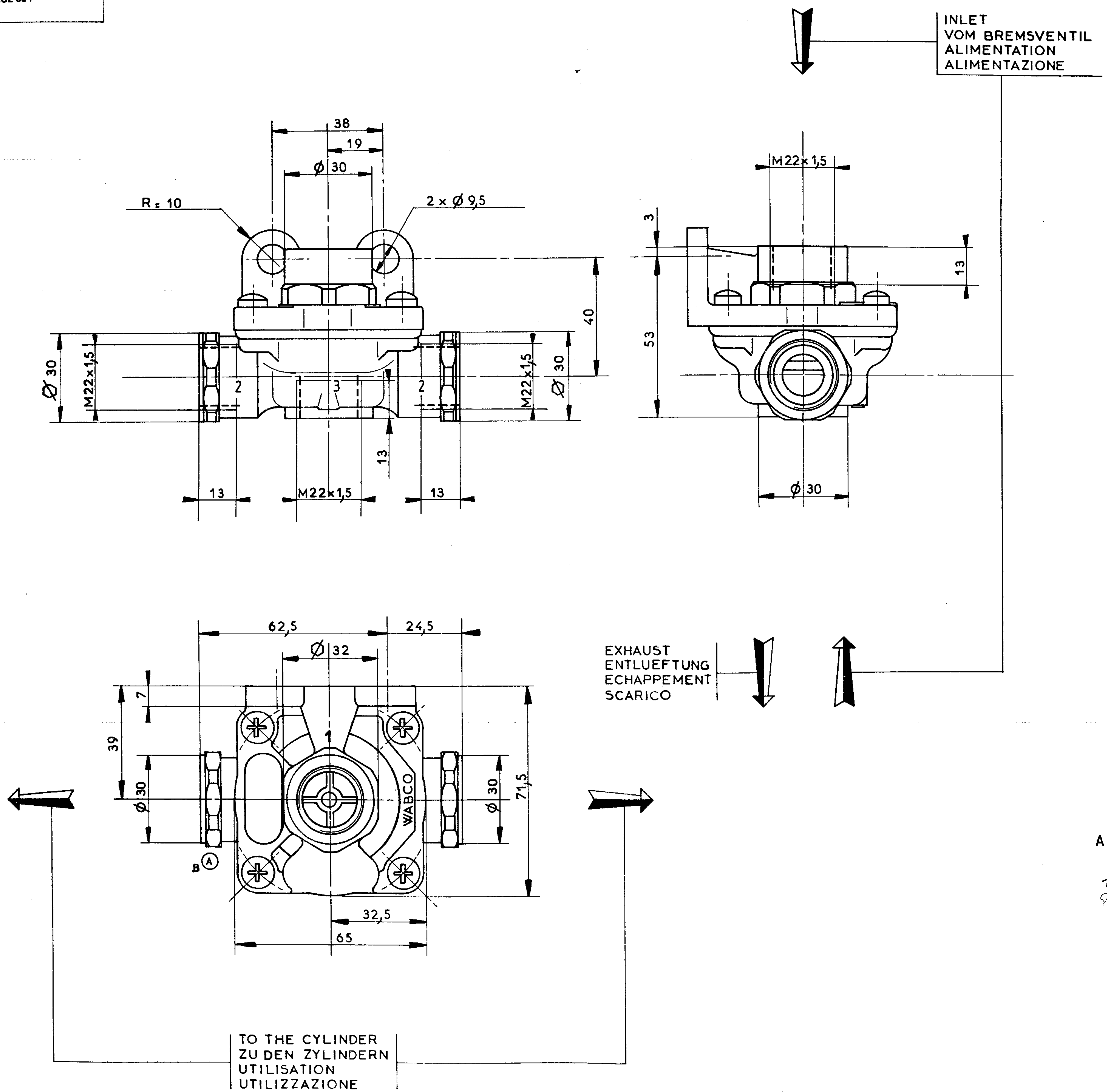

	DOUBLE CHECK VALVE ZWEIWEGEVENTIL DOUBLE VALVE DARRET DOPPIA VALVOLA DI ARRESTO
FUNCTION OF THE DEVICE ZWECK DES GERÄTES FONCTION DE L'APPAREIL FUNZIONE DELL'APPARECCHIO	QUICK RELEASE VALVE SCHNELL-LOESEVENTIL VALVE DE DESSERRAGE RAPIDE VALVOLA DI SFRENATURA RAPIDO
MEDIUM MEDIUM FLUIDE FLUIDO	AIR LUFT AIR ARIA
MAX FREE PASSAGE MAX FREIER DURCHGANG PASSAGE LIBRE MAXI PASSAGIO LIBERO MASSIMO	ϕ 14 mm = 154 mm²
SERVICE PRESSURE BETRIEBSDRUCK PRESSION DE SERVICE PRESSIONE D'ESERCIZIO	MAXI : 10 bar
ADMISSIBLE TEMPERATURES THERM ANWENDUNGSBEREICH TEMPERATURE DE SERVICE TEMPERATURA D'ESERCIZIO	− 40° C +80° C

A Ⓡ

CHANGE NO	LETT		DATE
81 146	A	Ⓡ	81-12-23
79052	A	Ⓟ	79.05.28
		Ⓝ	
		Ⓜ	
		Ⓛ	
		Ⓚ	
		Ⓙ	
		Ⓗ	
		Ⓖ	
		Ⓕ	
		Ⓔ	
		Ⓓ	
		Ⓒ	
		Ⓑ	
94 191	1KB	Ⓐ	94.10.31

GENERAL SPEC · ALLGEMEINE SPEZ · SPEC GENERALES · SPEC GENERALI

BLANK NO. – ROHTEILNUMMER / NO. PIECE BRUTE – NO. PEZZO GREZZO

TREATMENT – BEHANDLUNG / TRAITEMENT – TRATTAMENTO

SURFACE PROTECTION – OBERFLACHENSCHUTZ / PROTECTION – PROTEZIONE

MATERIAL – WERKSTOFF / MATIERE – MATERIALE

	DATE	SIGNATURE
DRAWN	79.05.28	Calle
CHECKED	—	BION
STANDARDIZATION	—	tra

WABCO

QUICK RELEASE VALVE
SCHNELL-LOESEVENTIL
VALVOLA DI SFRENATURA RAPIDO
VALVE DE DESSERRAGE RAPIDE

MASS	SCALE	IDENTIFICATION CODE		SHEET
0,3 Kg	1:1	473 501 001 0	F ~~154 872 98~~	1/1

REPLACEMENT FOR	SIZE	T R I	CODE FOR FUNCTION	CODE FOR SHAPE	CODE FOR DOCUMENT
DRAWING OF 76.09.13 A Ⓝ	A 2	210	531		605

100 mm

A 2

Propriété de la WABCO WESTINGHOUSE S.A. Tous droits de reproduction réservés