TIRAGE du :

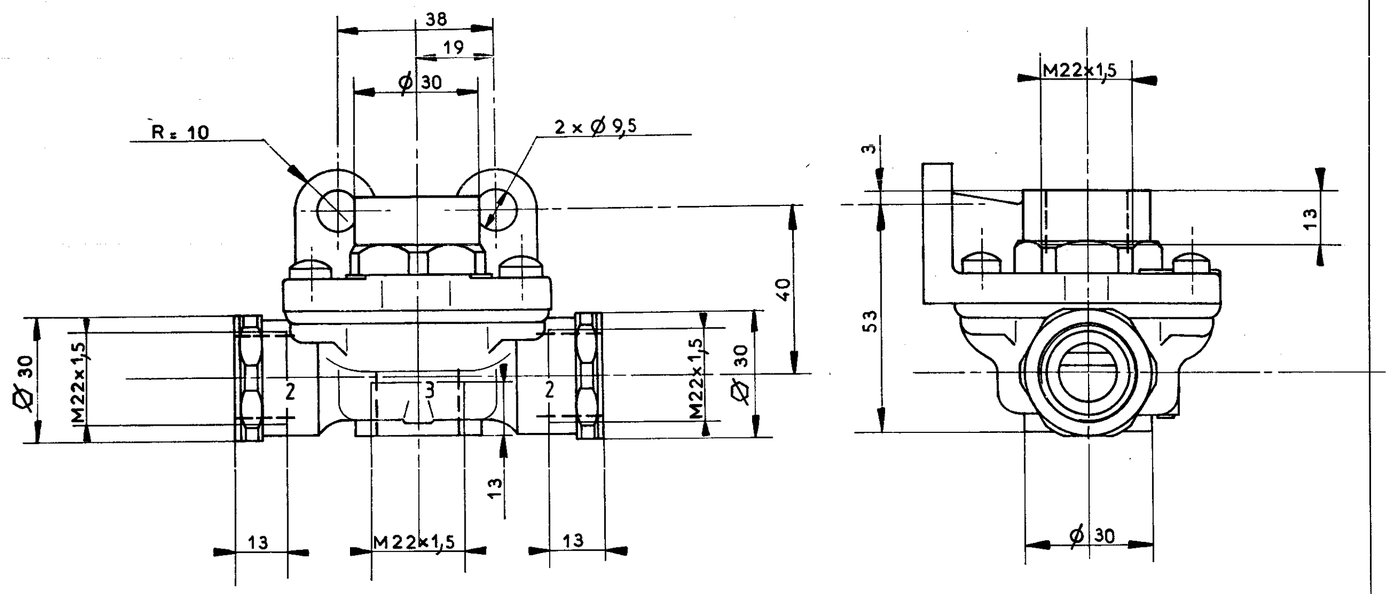

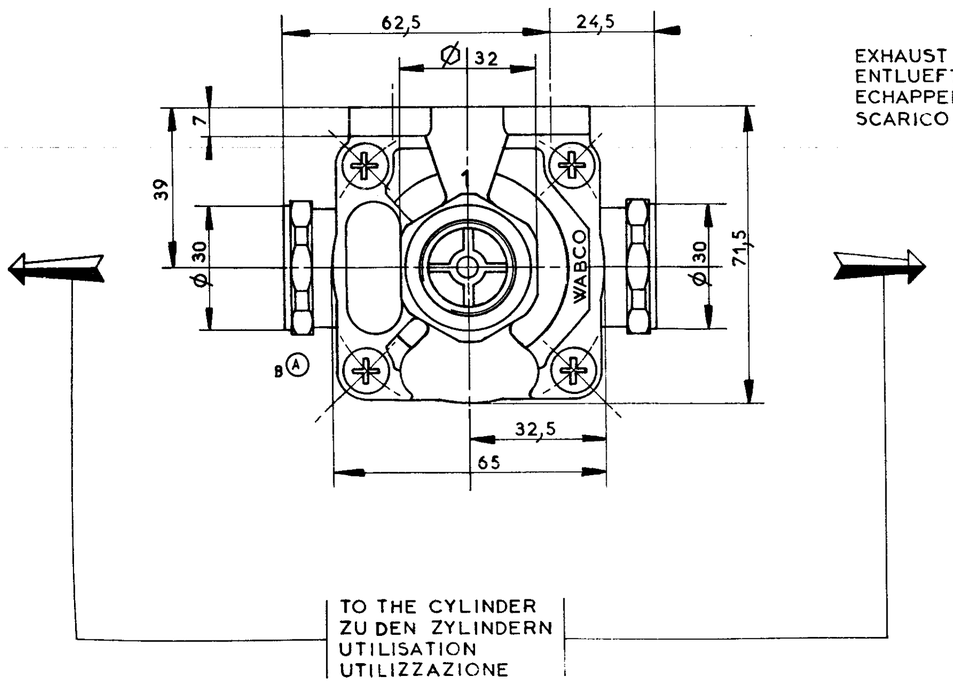

FUNCTION OF THE DEVICE ZWECK DES GERÄTES FONCTION DE L'APPAREIL FUNZIONE DELL'APPARECCHIO	DOUBLE CHECK VALVE ZWEIWEGEVENTIL DOUBLE VALVE D'ARRET DOPPIA VALVOLA DI ARRESTO QUICK RELEASE VALVE SCHNELL-LOESEVENTIL VALVE DE DESSERRAGE RAPIDE VALVOLA DI SFRENATURA RAPIDO
MEDIUM MEDIUM FLUIDE FLUIDO	AIR LUFT AIR ARIA
MAX FREE PASSAGE MAX FREIER DURCHGANG PASSAGE LIBRE MAXI PASSAGIO LIBERO MASSIMO	Ø 14 mm = 154 mm²
SERVICE PRESSURE BETRIEBSDRUCK PRESSION DE SERVICE PRESSIONE D'ESERCIZIO	MAXI : 10 bar
ADMISSIBLE TEMPERATURES THERM ANWENDUNGSBEREICH TEMPERATURE DE SERVICE TEMPERATURA D'ESERCIZIO	−40°C +80°C

A Ⓡ

1	81146	A Ⓡ	81.12.21	GENERAL SPEC · ALLGEMEINE SPEZ · SPEC GENERALES · SPEC GENERALI	BLANK NO – ROHTEILNUMMER NO. PIECE BRUTE – NO. PEZZO GREZZO
	79052	A Ⓟ	79.05.28		
		Ⓝ			
		Ⓜ		TREATMENT – BEHANDLUNG TRAITEMENT – TRATTAMENTO	SURFACE PROTECTION – OBERFLACHENSCHUTZ PROTECTION – PROTEZIONE / MATERIAL – WERKSTOFF MATIERE – MATERIALE
		Ⓛ			
		Ⓚ			
		Ⓙ			
		Ⓗ			
		Ⓖ			
		Ⓕ			
		Ⓔ			
		Ⓓ			
		Ⓒ			
		Ⓑ			
94.191	94	B Ⓐ	94.10.31		
CHANGE NO	LETT		DATE		

DATE	SIGNATURE	WABCO
DRAWN 79.05.28	Callé	QUICK RELEASE VALVE SCHNELL-LOESEVENTIL VALVOLA DI SFRENATURA RAPIDO VALVE DE DESSERRAGE RAPIDE
CHECKED —	BION	
STANDARDIZATION —		

MASS	SCALE	IDENTIFICATION CODE		SHEET
0,3 kg	1:1	473 501 201 0	F ~~154 872 91~~	1/1

REPLACEMENT FOR	SIZE	T.R.I	CODE FOR FUNCTION	CODE FOR SHAPE	CODE FOR DOCUMENT
DRAWING OF 76.09.13 A Ⓝ	A 2	210	531		605

100 mm

Propriété de la WABCO WESTINGHOUSE S.A. Tous droits de reproduction réservés