SURFACE PROTECTION	
I	JED-240-5
II	JED-007-3
III	JED-256-5

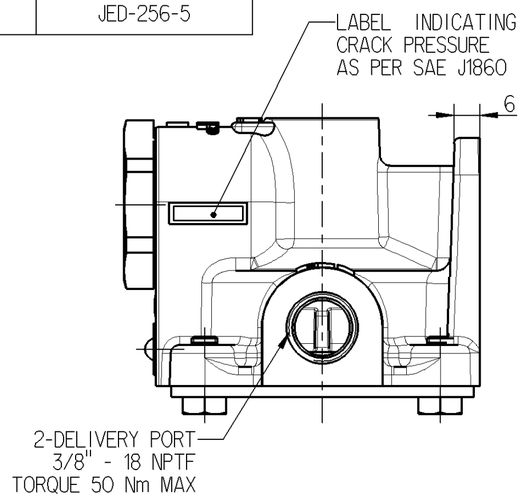

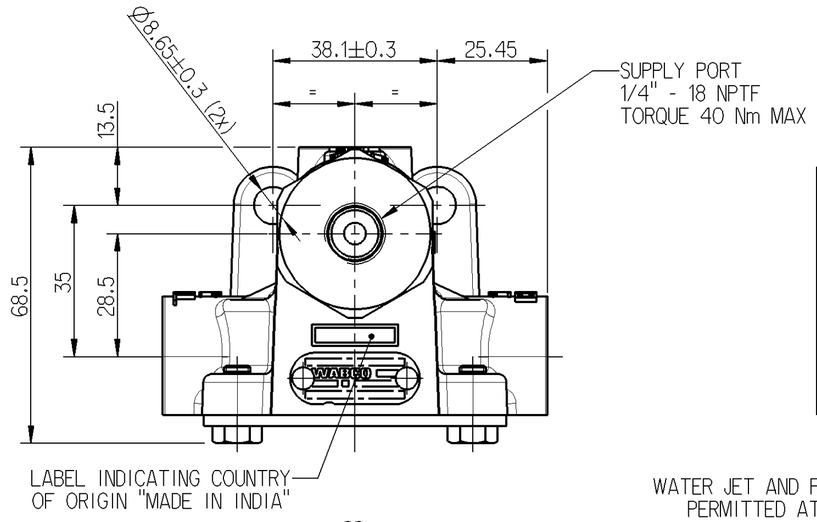

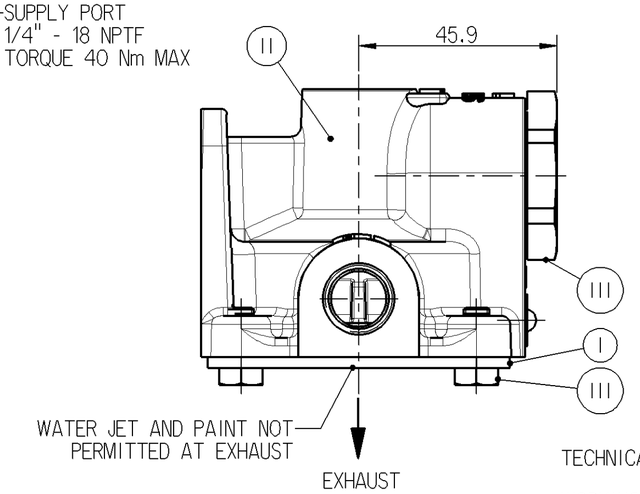

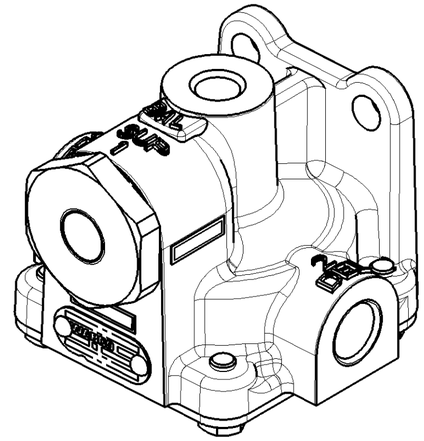

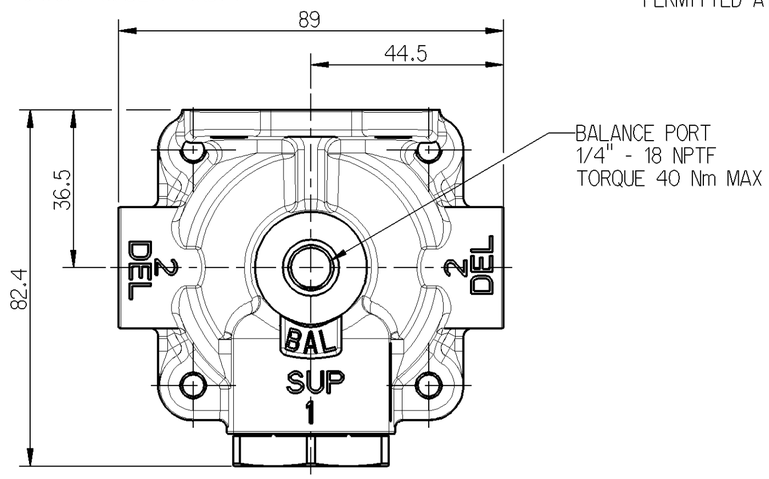

TECHNICAL DATA

WORKING MEDIUM : AIR

NORMAL WORKING PRESSURE : 9.4 bar (135 psi)

MAXIMUM WORKING PRESSURE : 11 bar (160 psi)

THERMAL RANGE OF OPERATION : -40°C TO +94°C
(-40°F TO +200°F)

ROOM TEMPERATURE LEAKAGE NOT TO EXCEED 30 SCCM

CRACK PRESSURE : 0-0.07 bar (0-1 psi)

PART TO BE IDENTIFIED BY CRACK PRESSURE, PART NUMBER, DATE OF MANUFACTURE AND COUNTRY OF ORIGIN LABEL

INSTALLATION : REFER FIGURE U

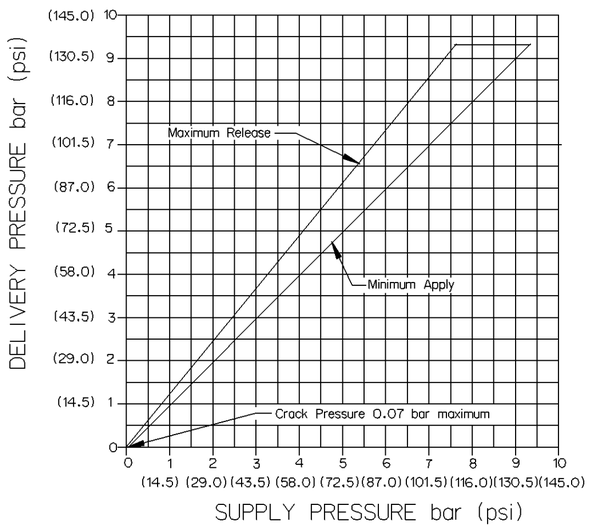

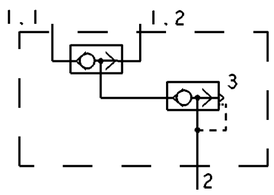

1.1 SUPPLY PORT
1.2 BALANCE PORT
2 DELIVERY PORT
3 EXHAUST

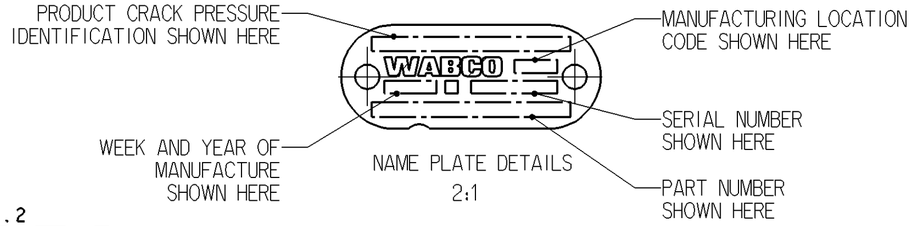

NAME PLATE DETAILS
2:1

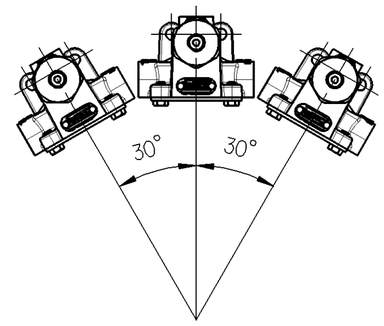

PERMISSIBLE INSTALLATION POSITION
FIGURE U

General Specification: JED-334-0						
Further Technical Data: 934 099 010 0						
Doc. Code: 035			Sheet: 1	To	9	
General Tolerances JED-261						
Range of Nominal Dimensions (± mm)						
Class 1)		≤ 50	> 50 ≤ 180	> 180 ≤ 400	> 400	∢
Fine		0.5	1.0	1.5	2.0	±3°
Medium	X	1.0	2.0	3.0	4.0	
Coarse		2.0	3.5	5.0	6.5	
Tapped Holes acc. JED-686						
1) Tolerance Class Applied Crossmarked						

Copyright WABCO®

Date	Signature
Drawn 2012-08-03	Kothandapani
Checked 2012-08-04	Arumugham
Expert A GANESAMOORTHY	

WABCO

QRDC-QUICK RELEASE WITH DOUBLE CHECK

Mass	Scale	Material No.	Date of first issue: 2012-08-03		
0.556 KG	1:1	473 505 003 0	Doc.Code 005	Language EN	Sheet 1/1
Size A 2	CAD System Pro/E	ECN-No. -	Revision -	Techn. Resp. 5311_WIN	Replacement for /

100mm

Toute Communication ou reproduction de ce document, toute exploitation ou communication de son contenu sont interdites, sauf autorisation expresse. Tout manquement à cette règle constitue un abus évident et expose son auteur au versement de dommages et intérêts. Tous droits de propriété industrielle réservés, notamment en matière de brevets et de modèles.

Weitergabe sowie Verwertung dieser Unterlage, Verwertung und Mitteilung ihres Inhalts nicht gestattet, soweit nicht ausdrücklich zugesichert. Zuwiderhandlungen stellen einen offensichtlichen Missbrauch dar und verpflichten zu Schadenersatz. Alle Rechte für den Fall der Patenterteilung oder Gebrauchsmuster-Eintragung vorbehalten.

Non è permesso consegnare a terzi o riprodurre questo documento, né utilizzarne il contenuto o renderlo comunque noto a terzi senza autorizzazione espressa. Ogni inosservanza costituisce un evidente abuso e comporterà il risarcimento dei danni subiti. Ci riservo ogni diritto di tutti i diritti derivanti da brevetti o modelli.

Copying of this document and giving it to others and the use or communication of its contents thereof, are forbidden without express authority. Offenders are liable to the payment of damages. All rights are reserved in the event of the grant of patent or registration of a utility model or design. This document is the subject of copyright.

dwg. 473505003 0 ___005 / Version: -2 / state: Under Review / mdb. 473505003 0 ___A02