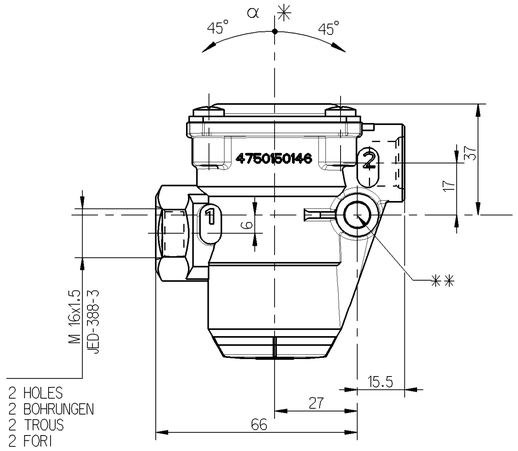

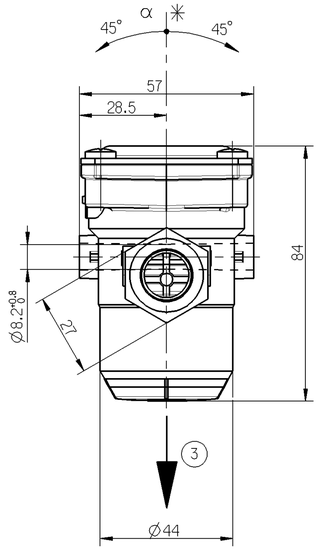

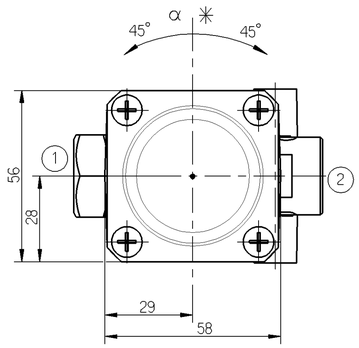

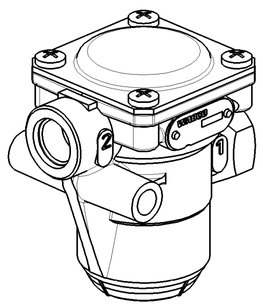

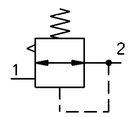

TORQUE FOR CONnECTIONS ANZUGSMOMENT FUR EINSCHRAUBSTUTZEN COUPLE DE SERRAGE DES RACCORDS COPPIA DI SERRAGGIO DEI RACCORDI	30 Nm MAXI	
(1) INLET VORRANT ALIMENTATION ALIMENTAZIONE	(HIGH PRESSURE) (HOCHDRUCK) (HAUTE PRESSION) (ALTA PRESSIONE)	
(2) DELIVERY AUSGESTEUERTE LUFT UTILISATION UTILIZZAZIONE	(LOW PRESSURE) (NIEDERDRUCK) (BASSE PRESSION) (BASSA PRESSIONE)	
(3) EXHAUST ENTLUEFTUNG ECHAPPEMENT SCARICO		
NOMINAL DIAMETER MIN MIN FREIER DURCHGANG DIAMETRE NOMINAL MIN DIAMETRO NOMINALE MIN	10 mm (78.5 mm^2)	
THERMAL RANGE OF APPLICATION THERMISCHER ANWENDUNGSBEREICH GAMME D'APPLICATION THERMIQUE CAMPO DI APPLICATIONE TERMILA	-40 °C.....+80°C	
INLET PRESSURE EIGESTEUERTER DRUCK PRESSION D'ALIMENTATION PRESSIONE D'ALIMENTAZIONE	P1 MAX = 14 BAR	IF CONSTANT FALLS UNVERANDERLICH SI CONSTANTE SE INVARIABILE
MEDIUM MEDIUM FLUIDE FLUIDO	AIR LUFT AIR ARIA	
✳ INSTALLATION RESTRICTIONS: EINBAUBESCHRANKUGEN: RESTRICTIONS D' INSTALLATION: LIMITAZIONI DI MONTAGGIO:	α max.±45° (E)	
✳✳ TORQUE FOR MOUNTING SCREWS: ANZUGSMOMENT FUER SCHRAUBE MONTAGE: COUPLE DE VIS SERRAGE A L'ASSEMBLAGE: COPPIA DI VITE SERRAGGIO AL MONTAGGIO:	12±2 Nm	

475 015 512 0				p2 +2.5 bar	5.5 +0.4/-0 (F)	8.5
WABCO No	CUSTOMER'S NUMBER	ZGS	CAD	Opening pressure	p2 pressure [bar]	p1 pressure [bar]

DCN-No.	Rev.	Date
116947	1xF	08-04-11
114811	2xE	07-11-16
113031	3xD	07-04-17

State of Revision

General Specification: JED-334-0
Further Technical Data:
Doc. Code: Sheet: To

General Tolerances JED-261

Class 1)		Range of Nominal Dimensions (± mm) ≤ 50	> 50 ≤ 180	> 180 ≤ 400	> 400	∢
Fine		0.5	1.0	1.5	2.0	±3°
Medium	X	1.0	2.0	3.0	4.0	
Coarse		2.0	3.5	5.0	6.5	

Tapped Holes acc.
1) Tolerance Class Applied Crossmarked

Copyright WABCO ®

Date	Signature
Drawn 2007-11-16	MOLYN
Checked 2007-05-11	Sutor
Expert MOLYN	

WABCO

PRESSURE LIMITING VALVE
DRUCKBEGRENZUNGSVENTIL
VALVE DE LIMITATION DE PRESSION
VALVOLA LIMITATRICE DI PRESSIONE

Mass	Scale	Material No.	WABCO Id. No.: 4750156590		
0.4 KG	1:1	475 015 659 0	Doc.Code 053	Language en/de fr/it	Sheet 1/1
Size A 1	TRI 530		Function Code	CAD System Pro/E	Prod.Type
			Replacement for		

100mm

Tous Communication ou reproduction de ce document, toute exploitation ou communication de son contenu sont interdites, sauf accord préalable expressément autorisé. Tout manquement à cette règle constitue un délit, ouvrant droit à des dommages et intérêts. Nous nous réservons le droit de déposer un brevet sur le présent modèle.

Weitergabe sowie Vervielfältigung dieser Unterlage, Verwertung und Mitteilung ihres Inhalts nicht gestattet, soweit nicht ausdrücklich zugestanden. Zuwiderhandlungen stehen ersatzpflichtigen Schadens. Wir behalten uns das Recht vor, Patentanmeldungen aus diesem Modell vorzunehmen.

Non è permesso consegnare o farci o riprodurre questo documento, né utilizzare il contenuto o renderlo comunque noto a terzi senza autorizzazione espressa. Ogni infrazione comporta un obbligo di risarcimento. Ci riserviamo il diritto di depositare un brevetto sulla base del presente modello.

Copying of this document and giving it to others and the use or communication of the contents thereof, are forbidden without express authority. Contravention of this rule will constitute an offence giving rise to the payment of damages. All rights are reserved in the event of the grant of a patent or registration of a utility model or design. We reserve the right to file a patent application based on this document.