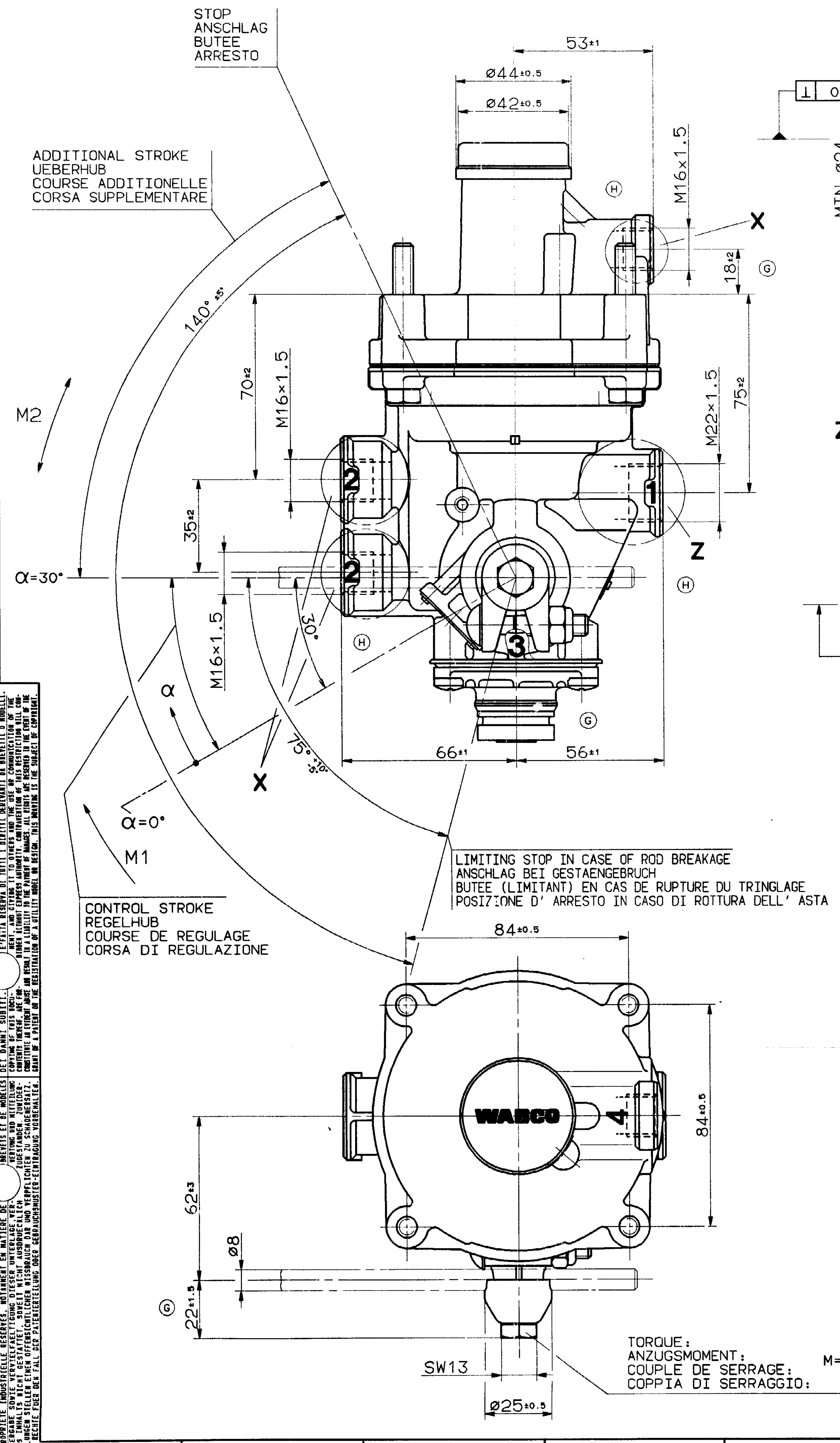

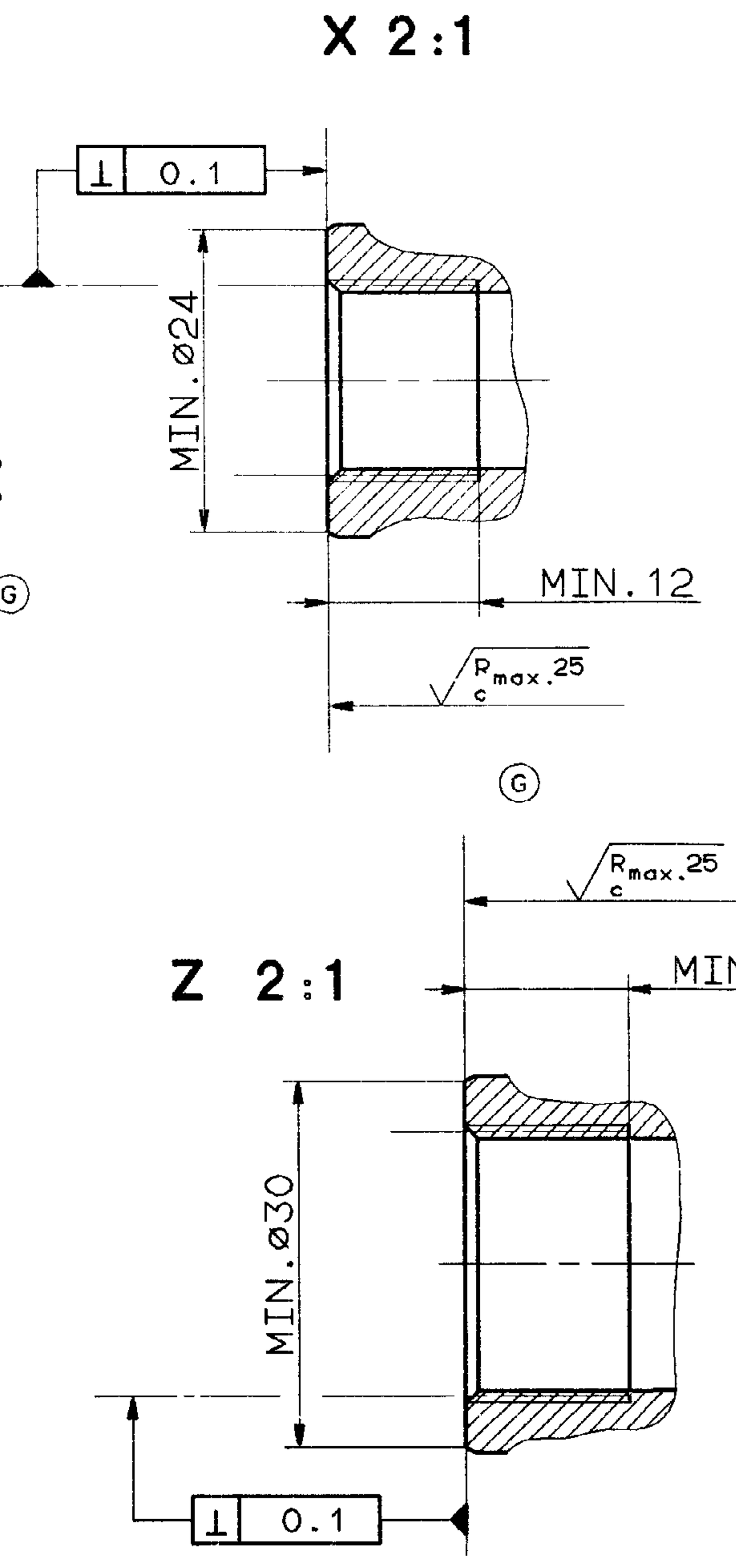

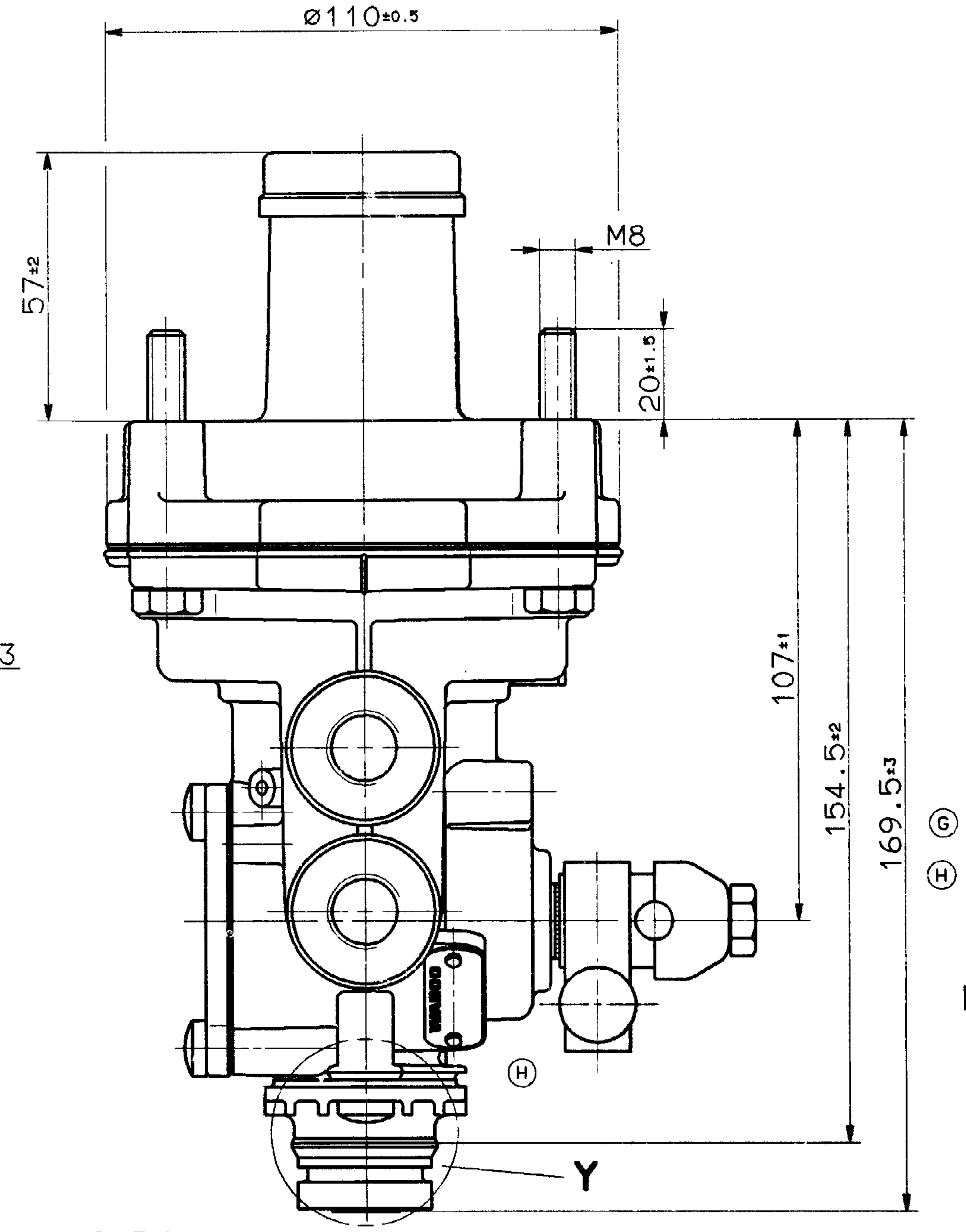

WORKING PRESSURE:
BETRIEBSDRUCK: MAX. p_e 10bar
PRESSION DE SERVICE:
PRESSIONE D'ESERCIZIO:

THERMAL RANGE OF APPLICATION:
THERMISCHER ANWENDUNGSBEREICH: -40° ... +80° C
GAMME D'APPLICATION THERMIQUE:
CAMPO DI APPLICAZIONE TERMICA:

MEDIUM: AIR
MEDIUM: LUFT
FLUIDE: AIR
FLUIDO: ARIA

1 = SUPPLY
VORRAT MAX. p_e 12bar
ALIMENTATION
ALIMENTAZIONE

2 = DELIVERY PRESSURE
AUSGESTEUERTER DRUCK
PRESSION DELIVREE
PRESSIONE EROGATA

3 = EXHAUST
ENTLUEFTUNG
ECHAPPEMENT
SCARICO

4 = CONTROL PRESSURE
STEUERDRUCK
PRESSION DE COMMANDE
PRESSIONE DI COMANDO

INSTALLATION POSITION AS DRAWN
EINBAULAGE WIE GEZEICHNET
POSITION D'INSTALLATION SUIVANT DESSIN
POSIZIONE DI MONTAGGIO COME DISEGNATO

M1 = NECESSARY DISPLACING MOMENT:
ERFORDERLICHES VERSTELLMOMENT: 1.8 Nm (p_4 =7.5bar)
COUPLE NECESSAIRE AU MOUVEMENT:
COPPIA DI REGOLAZIONE NECESSARIA:

M2 = ADMISSIBLE DISPLACING MOMENT:
ZULAESSIGES VERSTELLMOMENT: 20 Nm
ADMISSIBLE MAXI AU MOUVEMENT:
COPPIA DI REGOLAZIONE AMMESSA:

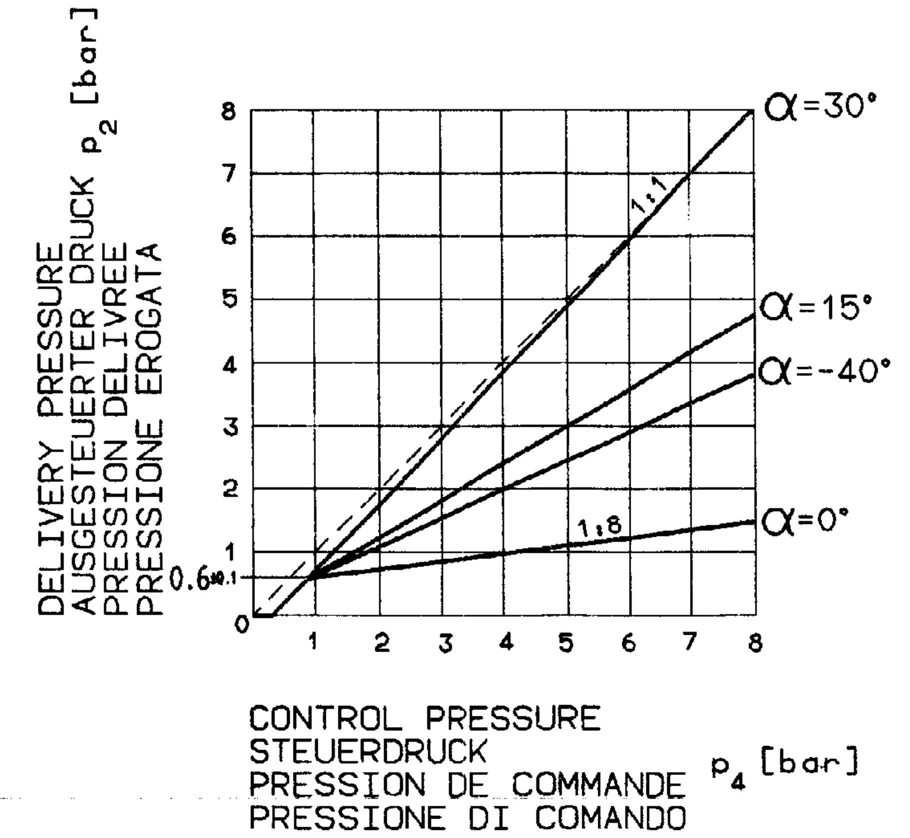

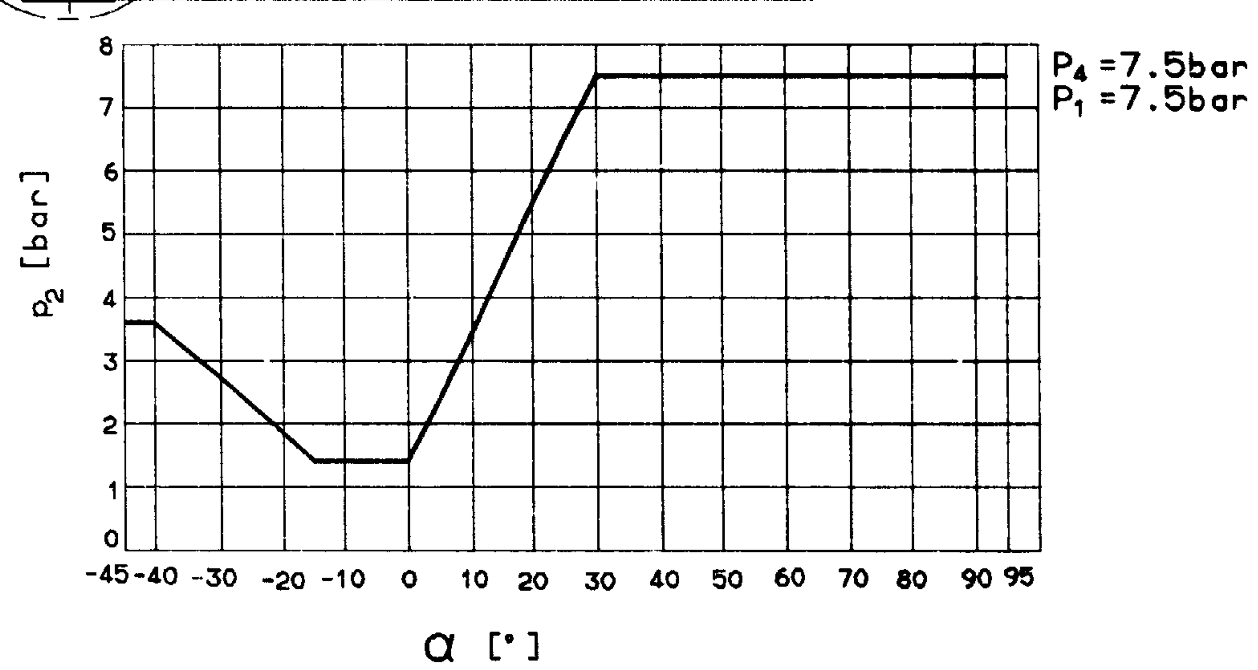

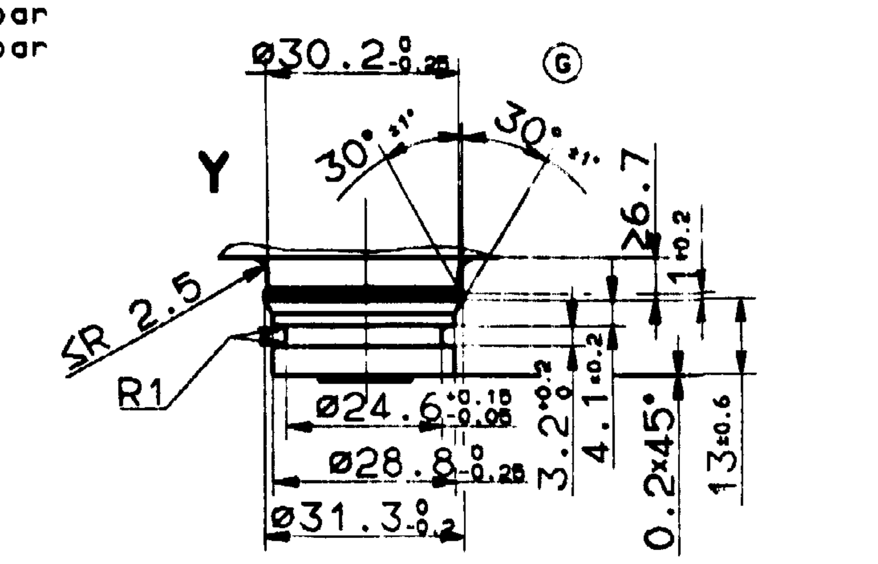

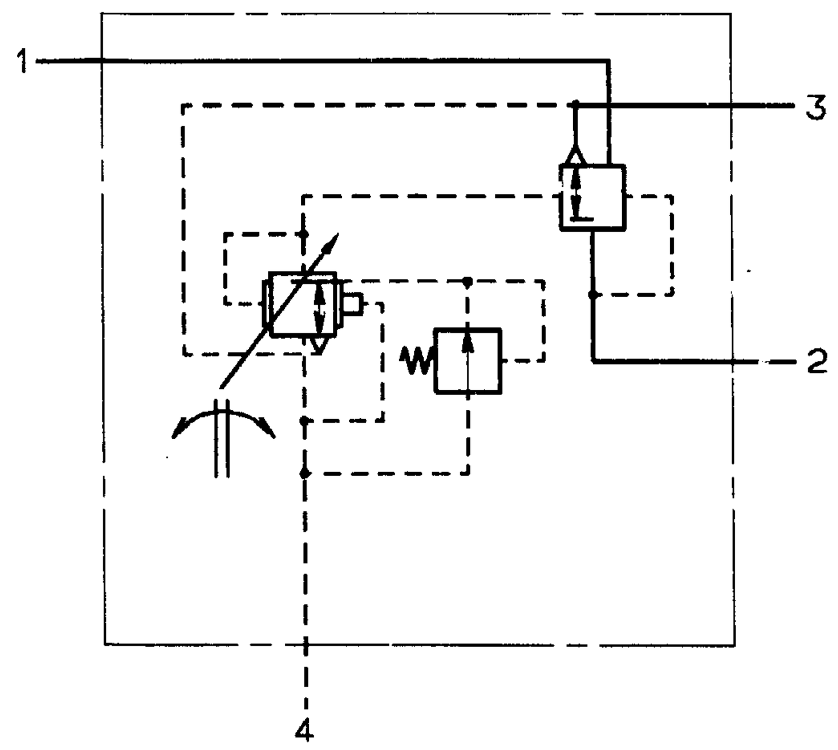

FURTHER TECHNICAL DATA SEE						
IDENTIFICATION NO.:						
CODE FOR DOCUMENT: 605	SHEET: TO					
GENERAL TOLERANCES						
CLASS	1)	≤50	> 50 ≤180	>180 ≤400	>400	RANGE OF NOMINAL DIMENSIONS (± mm)
I		0,5	1,0	1,5	2,0	
II	×	1,0	2,0	3,0	4,0	± 3°
III		2,0	3,5	5,0	6,5	
TAPPED HOLES ACC. ISO 4039 / JED-152						
1) TOLERANCE CLASS APPLIED CROSSMARKED						

DCN-NO.	REV.	DATE
045416	1×J	90-02-14
037719	5×H	87-12-03
034978	6×G	86-12-01

COPYRIGHT		
	DATE	SIGNATURE
DRAWN	86-12-01	HAUKE
CHECKED		FAUCK KIEL
STANDARDIZATION		PANTZER

WABCO — CLAYTON DEWANDRE

AUTOM. LOAD-SENSING VALVE
AUTOM. BREMSKRAFTREGLER
CORRECTEUR DE FREINAGE AUTOM.
REGULATORE DI FRENATURA AUTOM

MASS	SCALE	PRODUCT IDENTIFICATION NO.	CODE FOR DOCUMENT	SHEET
1.8 kg	1:1 2:1	475 710 025 0	605	1/1
SIZE	T.R.I.	CODE F. PROD.-GROUP	CODE FOR SHAPE	REPLACEMENT FOR
A 1	140	592		475 710 025 0 OF 82-03-30

EXPERT CODE 7 4 2

COPYING OF THIS DOCUMENT, AND GIVING IT TO OTHERS AND THE USE OR COMMUNICATION OF THE CONTENTS THEREOF, ARE FORBIDDEN WITHOUT EXPRESS AUTHORITY. CONTRAVENTION OF THIS RESTRICTION WILL CONSTITUTE AN EVIDENT ABUSE AND RESULT IN A LIABILITY TO THE PAYMENT OF DAMAGES. ALL RIGHTS ARE RESERVED IN THE EVENT OF THE GRANT OF A PATENT OR THE REGISTRATION OF A UTILITY MODEL OR DESIGN. THIS DRAWING IS THE SUBJECT OF COPYRIGHT.