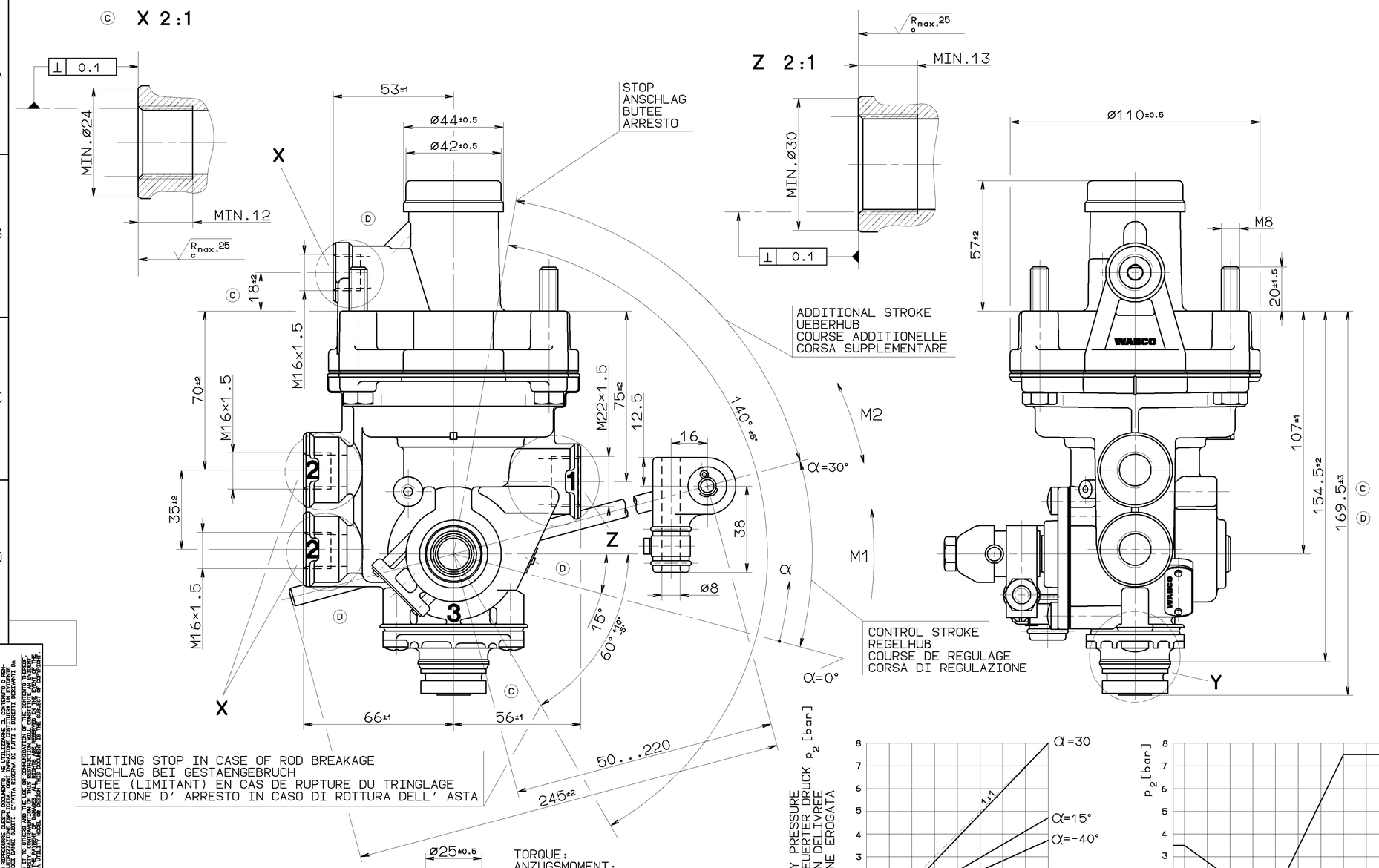

WORKING PRESSURE:
BETRIEBSDRUCK: MAX.p_e 10bar
PRESSION DE SERVICE:
PRESSIONE D'ESERCIZIO:

THERMAL RANGE OF APPLICATION:
THERMISCHER ANWENDUNGSBEREICH: -40°...+80° C
GAMME D'APPLICATION THERMIQUE:
CAMPO DI APPLICAZIONE TERMICA:

MEDIUM: AIR
MEDIUM: LUFT
FLUIDE: AIR
FLUIDO: ARIA

1 = SUPPLY
VORRAT
ALIMENTATION
ALIMENTAZIONE

2 = DELIVERY PRESSURE
AUSGESTEUERTER DRUCK
PRESSION DELIVREE
PRESSIONE EROGATA

3 = EXHAUST
ENTLUEFTUNG
ECHAPPEMENT
SCARICO

4 = CONTROL PRESSURE
STEUERDRUCK
PRESSION DE COMMANDE
PRESSIONE DI COMANDO

INSTALLATION POSITION AS DRAWN
EINBAULAGE WIE GEZEICHNET
POSITION D'INSTALLATION SUIVANT DESSIN
POSIZIONE DI MONTAGGIO COME DISEGNATO

M1 = NECESSARY DISPLACING MOMENT:
ERFORDERLICHES VERSTELLMOMENT: 1.8 Nm (p_4 =7.5bar)
COUPLE NECESSAIRE AU MOUVEMENT:
COPPIA DI REGOLAZIONE NECESSARIA:

M2 = ADMISSIBLE DISPLACING MOMENT:
ZULAESSIGES VERSTELLMOMENT: 20 Nm
ADMISSIBLE MAXI AU MOUVEMENT:
COPPIA DI REGOLAZIONE AMMESSA:

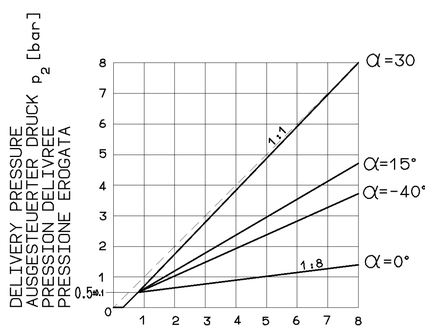

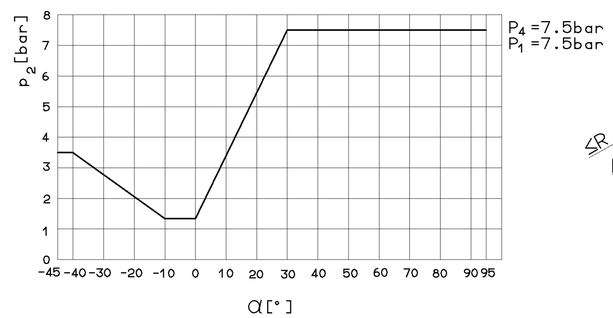

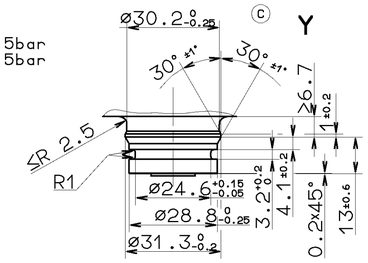

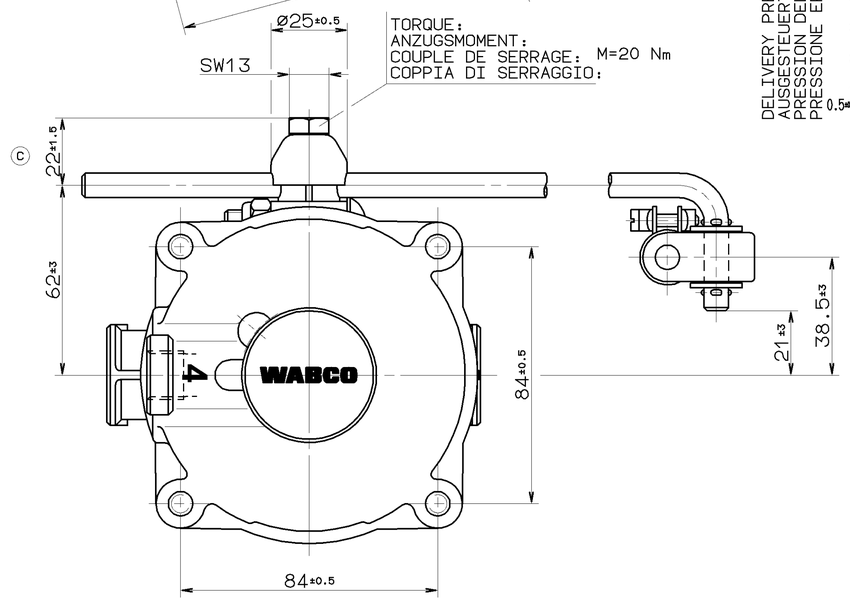

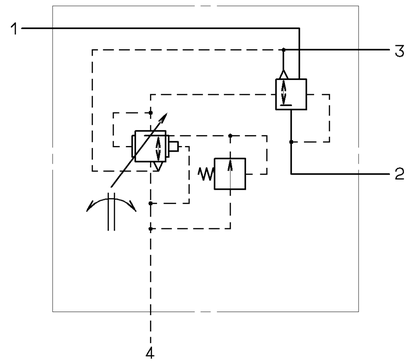

GENERAL SPECIFICATION: JED-334								
FURTHER TECHNICAL DATA:								
DOC. CODE: SHEET: TO								
GENERAL TOLERANCES								
CLASS 1)	RANGE OF NOMINAL DIMENSIONS (± mm) ≤50	>50 ≤180	>180 ≤400	>400				
FINE	0,5	1,0	1,5	2,0				
MEDIUM ×	1,0	2,0	3,0	4,0	± 3°			
COARSE	2,0	3,5	5,0	6,5		037719	4×D	87-12-03
TAPPED HOLES ACC. ISO 4039 / JED-152						034978	6×C	86-12-01
1) TOLERANCE CLASS APPLIED CROSSMARKED						DCN-NO.	REV.	DATE

CADAM-DRAWING COPYRIGHT		WABCO	
DATE	SIGNATURE		
86-12-01	DRAWN: HAUKE	AUTOM.LOAD-SENSING VALVE AUTOM.BREMSKRAFTREGLER CORRECTEUR DE FREINAGE AUTOM. REGULATORE DI FRENATURA AUTOM	
	CHECKED: FAUCK DEI.		
	STANDARDIZATION: PANTZER		
MASS 2.0 KG	SCALE 1:1 2:1	PRODUCT IDENTIFICATION NO. 475 710 033 0	DOC. CODE 605 / SHEET 1/1
SIZE A 1	T.R.I. 140	592	SHAPE CODE
			REPLACEMENT FOR 475 710 033 0 DE 85-01-31

100mm

EXPERT CODE 7 4 2

PRODUCT TYPE 0 0 X

TOUTE COMMUNICATION OU REPRODUCTION DE CE DOCUMENT, TOUTE EXPLOITATION OU COMMUNICATION DE SON CONTENU NON E PERMESSO CONSEGNARE A TERZI O RIPRODURRE QUESTO DOCUMENTO, NE UTILIZZARE IL CONTENUTO O RIVELARNE IL CONTENUTO SENZA AUTORIZZAZIONE SCRITTA. LE DROITS DE PROPRIETE INTELLECTUELLE ET INDUSTRIELLE, ET LE DROIT DE MODIFICATION RESTENT DE NOTRE PROPRIETE.
IN ALL RIGHTS, INCLUDING THE RIGHTS TO THE GRANTING OF PATENTS AND THE REGISTRATION OF UTILITY MODELS, ARE RESERVED. NOTHING IN THIS DOCUMENT IS TO BE GIVEN TO OTHERS AND THE USE OR COMMUNICATION OF THE CONTENTS THEREOF, OR DISCLOSURE OF THE CONTENTS, WITHOUT WRITTEN AUTHORISATION IS PROHIBITED. THE RIGHTS FOR MODIFICATION ARE THE PROPERTY OF WABCO.
ALLE RECHTE, DARUNTER DIE RECHTE AUF ERTEILUNG VON PATENTEN UND EINTRAGUNG VON GEBRAUCHSMUSTERN, SIND VORBEHALTEN. AUSSERHALB DES EIGENEN BETRIEBS DURFEN DIESE UNTERLAGE OHNE UNSERE ZUSTIMMUNG WEDER DIRKT NOCH INDIREKT WEITERGegeben, KOPIERT, VERVIELFALTIGT, ANGEWENDET ODER MITGETEILT WERDEN. DIE RECHTE FUR DIE ABANDERUNG SIND EIGENTUM DER WABCO.
GERAUCHSMUSTER-EINTRAGUNG VORBEHALTEN.