SURFACE PROTECT./OBERFL. SCHUTZ	
I	JED-259
II	JED-256
III	JED-257
IV	KUNSTSTOFF
V	JED-260

TORQUE FOR CONNECTIONS:
ANZUGSMOMENT FUER EINSCHRAUBSTUTZEN: M16×1.5: $M_{max.}$= 34 Nm
COUPLE DE SERRAGE DES RACCORDS: M22×1.5: $M_{max.}$= 53 Nm
COPPIA DI SERRAGGIO DEI RACCORDI:

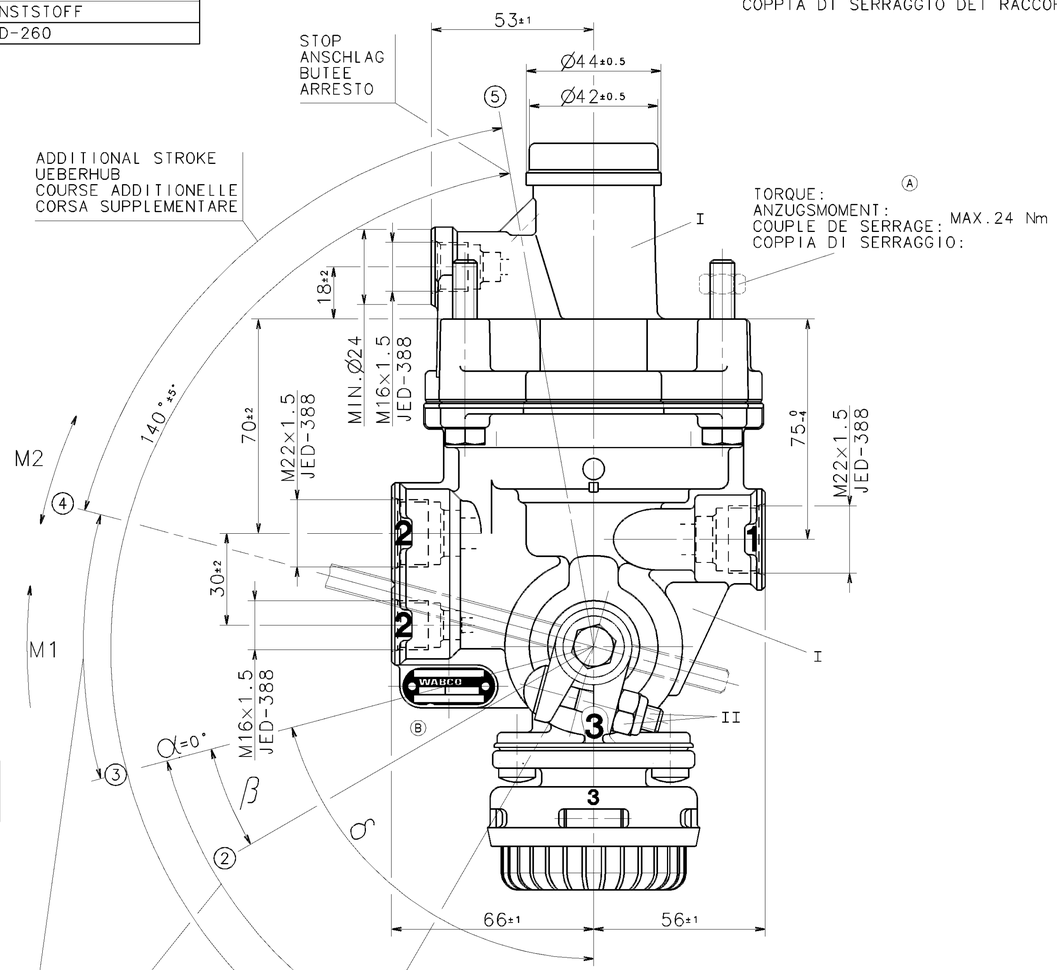

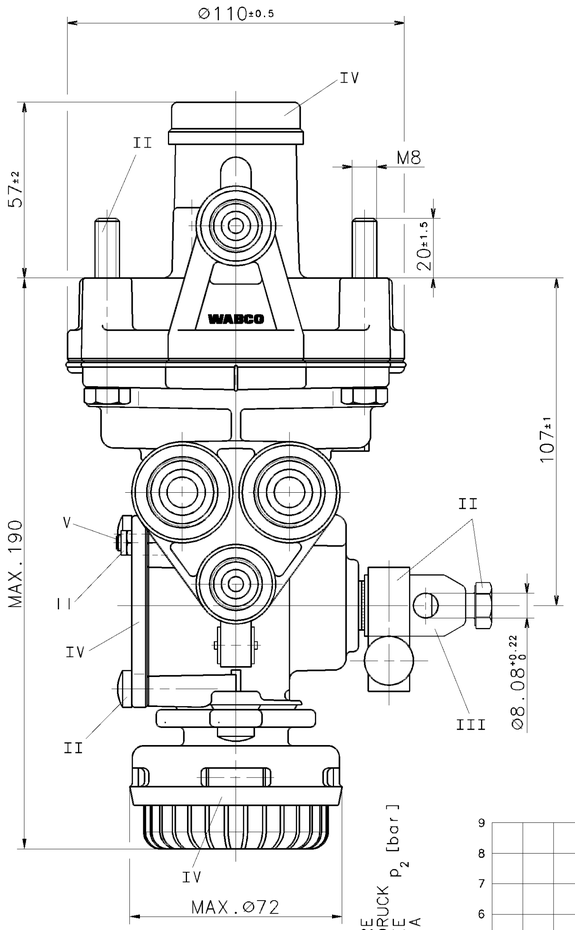

THERMAL RANGE OF APPLICATION:
THERMISCHER ANWENDUNGSBEREICH:
GAMME D'APPLICATION THERMIQUE: -40°...+80° C
CAMPO DI APPLICAZIONE TERMICA:

MEDIUM: AIR
MEDIUM: LUFT
FLUIDE: AIR
FLUIDO: ARIA

WORKING PRESSURE:
BETRIEBSDRUCK:
PRESSION DE SERVICE: *
PRESSIONE D'ESERCIZIO:

1 = SUPPLY / VORRAT / ALIMENTATION / ALIMENTAZIONE — *MAX.p_e 13bar

2 = DELIVERY PRESSURE / AUSGESTEUERTER DRUCK / PRESSION DELIVREE / PRESSIONE EROGATA

3 = EXHAUST / ENTLUEFTUNG / ECHAPPEMENT / SCARICO

4 = CONTROL PRESSURE / STEUERDRUCK / PRESSION DE COMMANDE / PRESSIONE DI COMANDO — *MAX.p_e 10.2bar (TEMPORARY / KURZZEITIG / DE COURTE DUREE / BREVE TEMPO SOLO MAX.p_e 13bar)

M1 = NECESSARY DISPLACING MOMENT / ERFORDERLICHES VERSTELLMOMENT / COUPLE NECESSAIRE AU MOUVEMENT / COPPIA DI REGOLAZIONE NECESSARIA

M2 = ADMISSIBLE DISPLACING MOMENT: / ZULAESSIGES VERSTELLMOMENT: / ADMISSIBLE MAXI AU MOUVEMENT: / COPPIA DI REGOLAZIONE AMMESSA: — 20 Nm

○ = POSITION OF THE LEVER / HEBELSTELLUNG / POSITION DU LEVIER / POSIZIONE LEVA

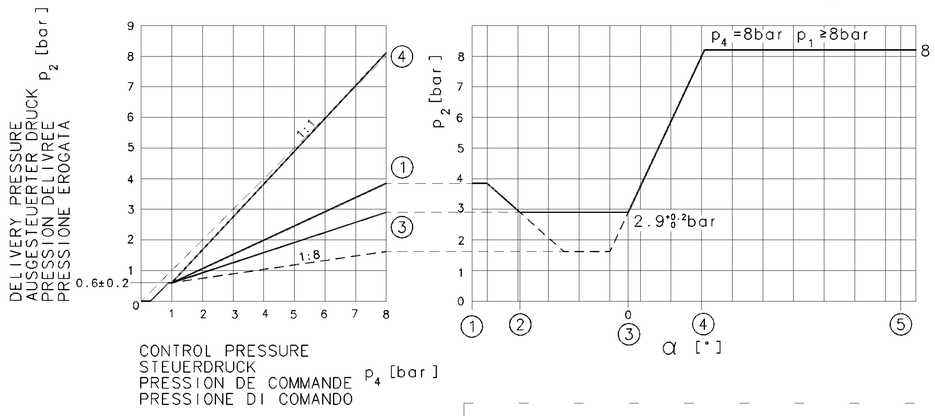

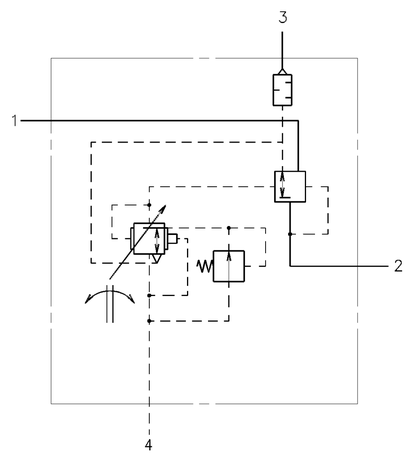

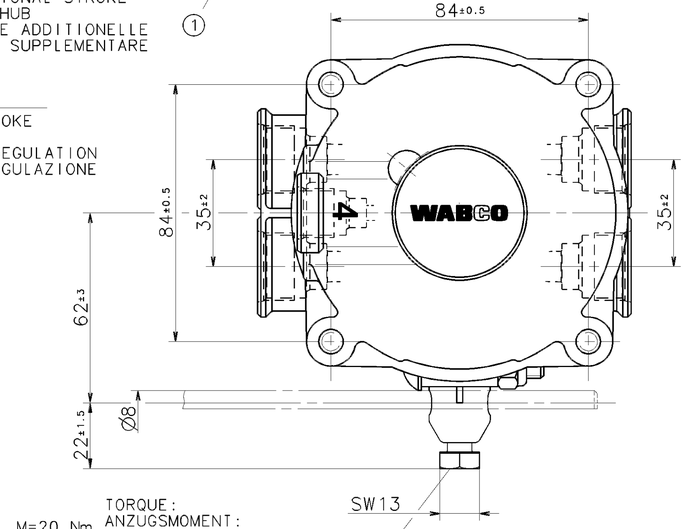

	475 710 137 0	A 003 431 16 12	24	36	51^{+10}_{-5}	81	1.6	
	475 710 136 0	A 003 431 27 12	16	39	54^{+10}_{-5}	84	2.4	
ZGS	WABCO	CUSTOMER'S NO. / KUNDEN-NR. / NO. CLIENT / NO. CLIENTE	α	β	γ	δ	[Nm] M1	
IDENTIFICATION			[°]					

GENERAL SPECIFICATION: JED-334
FURTHER TECHNICAL DATA:
DOC. CODE: SHEET: TO

GENERAL TOLERANCES

CLASS 1)	RANGE OF NOMINAL DIMENSIONS (± mm) ≤50	>50 ≤180	>180 ≤400	>400	∢
FINE	0,5	1,0	1,5	2,0	
MEDIUM X	1,0	2,0	3,0	4,0	± 3°
COARSE	2,0	3,5	5,0	6,5	

TAPPED HOLES ACC. ~~ISO 4029 / JED 152~~ JED-388
1) TOLERANCE CLASS APPLIED CROSSMARKED

DCN-NO.	REV.	DATE
075436	1xC	00-10-16
066704	4xB	98-04-16
057066	4xA	95-03-28

CADAM-DRAWING COPYRIGHT

DATE	SIGNATURE	
DRAWN: 95-01-25	HAUKE	AUTOM.LOAD-SENSING VALVE
CHECKED: 95-01-27	FAUCK KIEL DEIKE	AUTOM.BREMSKRAFTREGLER / CORRECTEUR DE FREINAGE AUTOM.
STANDARDIZATION: 95-01-31	PANTZER	REGULATORE DI FRENATURA AUTOM

WABCO

MASS	SCALE	PRODUCT IDENTIFICATION NO.	DOC. CODE	SHEET
1.9 KG	1:1	475 710 093 0	653	1/1
SIZE	I.R.I.			
A 1	140		SHAPE CODE	REPLACEMENT FOR 884 009 637 0 OF 94-05-18

100mm EXPERT CODE 7 4 2 PRODUCT TYPE 0 0 X

TOUTE COMMUNICATION OU REPRODUCTION DE CE DOCUMENT, TOUTE EXPLOITATION OU COMMUNICATION DE SON CONTENU NON E PERMESSO CONSEGNARE A TERZI O RIPRODURRE QUESTO DOCUMENTO, NE UTILIZZARNE IL CONTENUTO O RENDERNE ESTESE SONO AUTORIZZATE PER ISCRITTO. EN CAS DE DELIVRANCE DE BREVET OU DE DEPOT DE MODELE DE GRAPHE ABUSE DEVIENT DE DOMMAGES-INTERETS. WIEDERGABE SOWIE VERWERTUNG UND MITTEILUNG IHRES INHALTS NICHT ZULAESSIG SOWEIT NICHT AUSDRUECKLICH ZUGESTANDEN. ZUWIDERHANDLUNGEN VERPFLICHTEN ZUM SCHADENSERSATZ. IN DER ERTEILUNG VON PATENT- OD. GEBRAUCHSMUSTERSCHUTZ ODER EINTRAGUNG VON MARKEN VERFALLEN SAEMTLICHE SCHADENSERSATZANSPRUECHE. THIS DOCUMENT IS THE SUBJECT OF COPYRIGHT. COPYING OF THIS DOCUMENT AND GIVING IT TO OTHERS AND THE USE OR COMMUNICATION OF THE CONTENTS THEREOF, ARE FORBIDDEN WITHOUT EXPRESS AUTHORITY. OFFENDERS ARE LIABLE TO PAY COMPENSATION. ALL RIGHTS ARE RESERVED IN THE EVENT OF THE GRANT OF A PATENT OR REGISTRATION OF A UTILITY MODEL OR DESIGN.