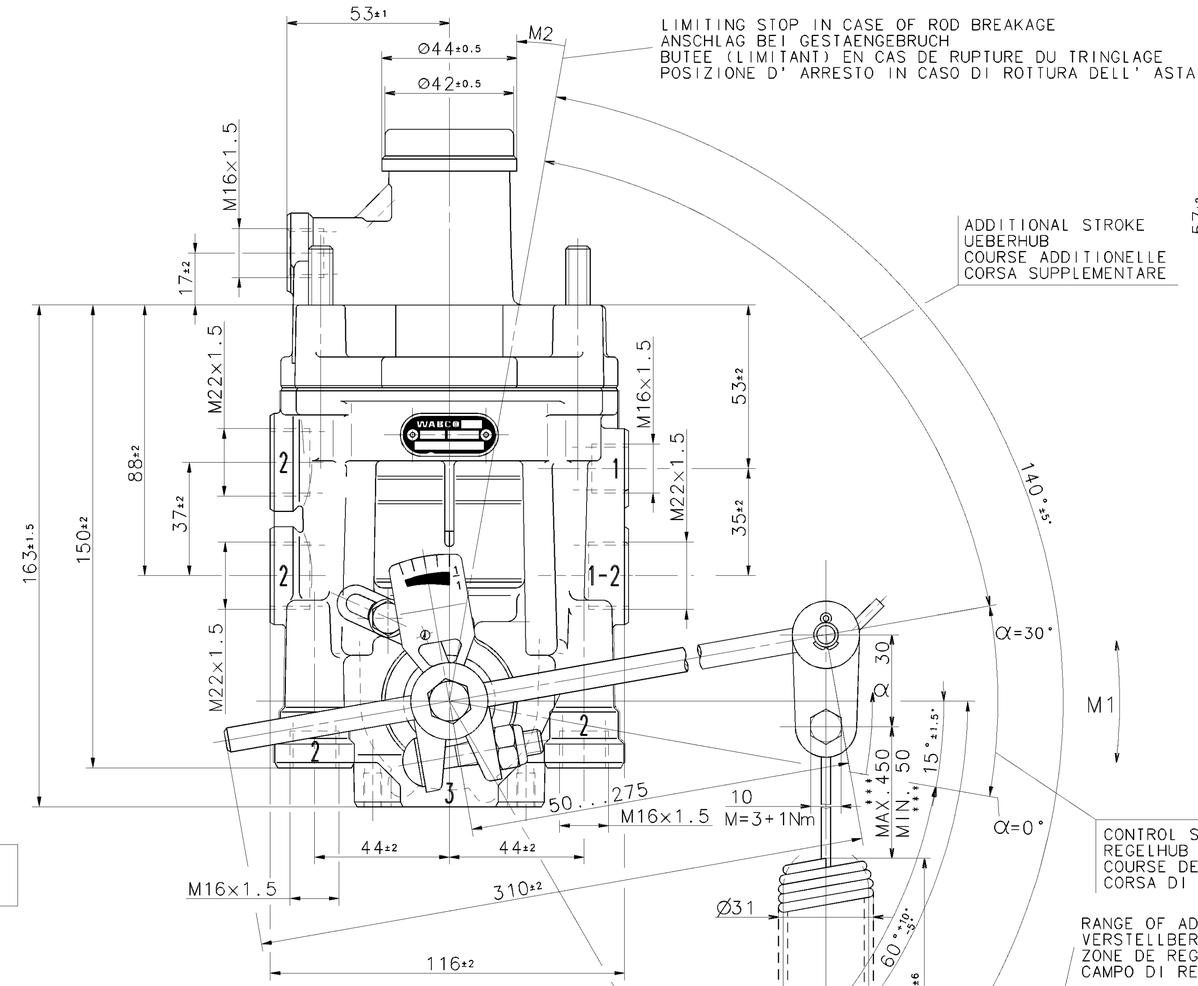

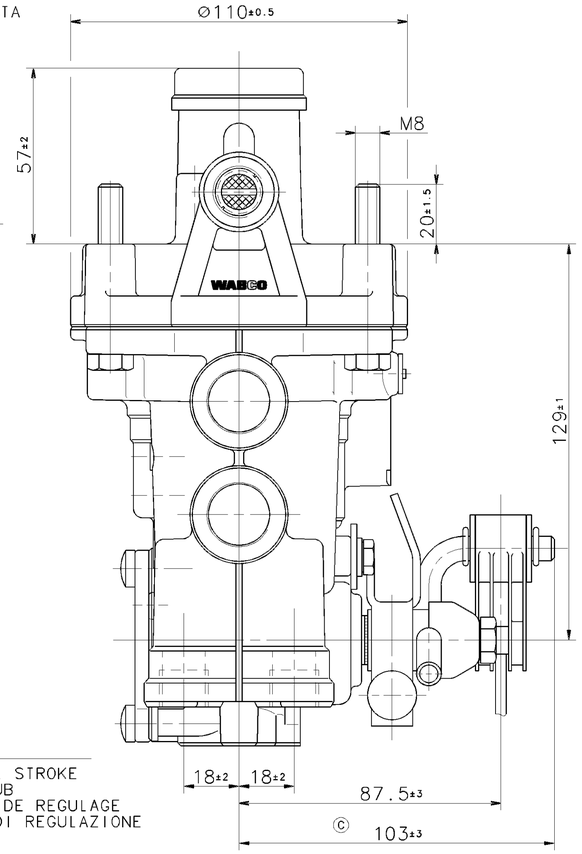

WORKING PRESSURE:
BETRIEBSDRUCK: *
PRESSION DE SERVICE:
PRESSIONE D'ESERCIZIO:

THERMAL RANGE OF APPLICATION:
THERMISCHER ANWENDUNGSBEREICH: -40°...+80° C
GAMME D'APPLICATION THERMIQUE:
CAMPO DI APPLICAZIONE TERMICA:

MEDIUM: AIR
MEDIUM: LUFT
FLUIDE: AIR
FLUIDO: ARIA

1= PORT FOR SUPPLY LINE
ANSCHLUSS FUER VORRATSLEITUNG (p1) *MAX.p_e 10bar
ORIFICE POUR CONDUITE D'ALIMENTATION
ORIFIZIO PER LA CONDOTTA D'ALIMENTAZIONE

1-2= RESERVOIR SUPPLY PORT
ANSCHLUSS FUER LUFTBEHAELTER
ORIFICE AU RESERVOIR
ORIFIZIO AI SERBATOIO

2= DELIVERY PRESSURE
AUSGESTEUERTER DRUCK
PRESSION DELIVREE
PRESSIONE EROGATA

3= EXHAUST
ENTLUEFTUNG
ECHAPPEMENT
SCARICO

4= CONTROL PRESSURE
STEUERDRUCK (p4) *MAX.p_e 8bar
PRESSION DE COMMANDE
PRESSIONE DI COMANDO

INSTALLATION POSITION AS DRAWN
EINBAULAGE WIE GEZEICHNET
POSITION D'INSTALLATION SUIVANT DESSIN
POSIZIONE DI MONTAGGIO COME DISEGNATO

M1= NECESSARY DISPLACING MOMENT:
ERFORDERLICHES VERSTELLMOMENT: 2 Nm (p_4=8bar)
COUPLE NECESSAIRE AU MOUVEMENT:
COPPIA DI REGOLAZIONE NECESSARIA:

M2= ADMISSIBLE DISPLACING MOMENT:
ZULAESSIGES VERSTELLMOMENT: 20 Nm
ADMISSIBLE MAXI AU MOUVEMENT:
COPPIA DI REGOLAZIONE AMMESSA:

TORQUE FOR CONNECTIONS:
ANZUGSMOMENT FUER EINSCHRAUBSTUTZEN: M16x1.5 : MAX.34Nm
COUPLE DE SERRAGE DES RACCORDS: M22x1.5 : MAX.53Nm
COPPIA DI SERRAGGIO DEI RACCORDI:

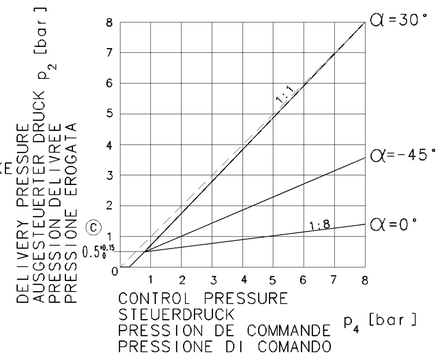

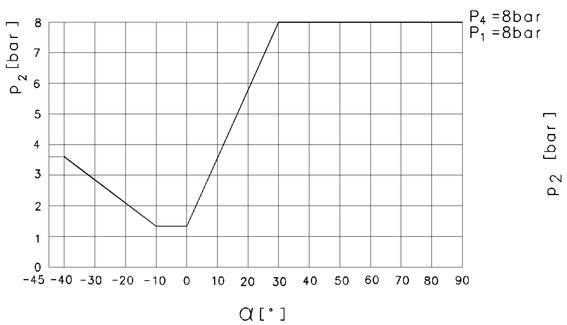

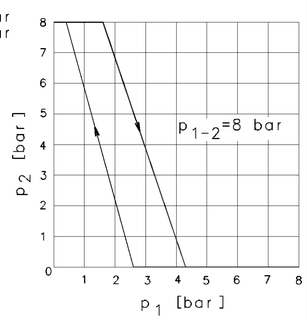

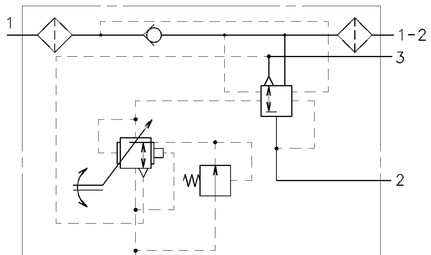

GENERAL SPECIFICATION: JED-334								
FURTHER TECHNICAL DATA:								
DOC. CODE:		SHEET: 10						
GENERAL TOLERANCES								
CLASS 1)		RANGE OF NOMINAL DIMENSIONS (± mm) ≤50	>50 ≤180	>180 ≤400	>400			
FINE		0,5	1,0	1,5	2,0			
MEDIUM	X	1,0	2,0	3,0	4,0	± 3°		
COARSE		2,0	3,5	5,0	6,5			
TAPPED HOLES ACC. ISO 4039 / JED-152								
1) TOLERANCE CLASS APPLIED CROSSMARKED								

DCN-NO.	REV.	DATE
075472	1xD	01-01-15
039405	4xC	98-11-03

100mm

CADAM-DRAWING COPYRIGHT

DATE	SIGNATURE
DRAWN: 98-11-03	ELZE
CHECKED: 98-11-03	FAUCK
STANDARDIZATION:	

WABCO

AUTOM.LOAD-SENSING VALVE
AUTOM.BREMSKRAFTREGLER
CORRECTEUR DE FREINAGE AUTOM.
REGULATORE DI FRENATURA AUTOM

MASS	SCALE	PRODUCT IDENTIFICATION NO.	DOC. CODE	SHEET
2.6 KG	1:1 2:1	475 712 004 0	605	1/1
SIZE A 1	I.R.I. 140		SHAPE CODE	REPLACEMENT FOR 475 712 004 0 (C) OF 89-01-31

EXPERT CODE 7 4 2 PRODUCT TYPE 0 0 X

TOUTE COMMUNICATION OU REPRODUCTION DE CE DOCUMENT, TOUTE EXPLOITATION OU COMMUNICATION DE SON CONTENU OU DE SES PARTIES SONT INTERDITES SAUF AUTORISATION ECRITE. TOUS DROITS DE PROPRIETE INDUSTRIELLE DEPOSES OU NON DEPOSES RESERVES.
NON È PERMESSO CONSEGNARE A TERZI, O RIPRODURRE QUESTO DOCUMENTO, NÉ UTILIZZARNE IL CONTENUTO O RENDERNE PARTE AGLI ALTRI SALVO CON ESPRESSA AUTORIZZAZIONE SCRITTA. TUTTI I DIRITTI DI PROPRIETÀ INDUSTRIALE, DEPOSITATI O NON DEPOSITATI, RISERVATI.
NOTE COPYRIGHT
WELCHERLEI DOKUMENTEN, DIE NICHT AUSDRÜCKLICH ZUM WEITERGEBEN ODER VERVIELFÄLTIGEN ZUGELASSEN SIND, DÜRFEN WEDER VERWERTET NOCH MITGETEILT WERDEN. ALLE RECHTE FÜR DEN FALL DER ERTEILUNG EINES GEWERBLICHEN SCHUTZRECHTS ODER EINTRAGUNG EINES GEBRAUCHSMUSTERS VORBEHALTEN.
COPYING OF THIS DOCUMENT AND GIVING IT TO OTHERS AND THE USE OR COMMUNICATION OF THE CONTENTS THEREOF, ARE FORBIDDEN WITHOUT EXPRESS AUTHORITY. ALL RIGHTS GRANTED ON THE ISSUE OF A UTILITY MODEL OR DESIGN OR GRANT OF PATENT OR REGISTRATION OF A UTILITY MODEL OR DESIGN. THIS DOCUMENT IS THE SUBJECT OF COPYRIGHT.

1009/016/J/04.93
605/6633