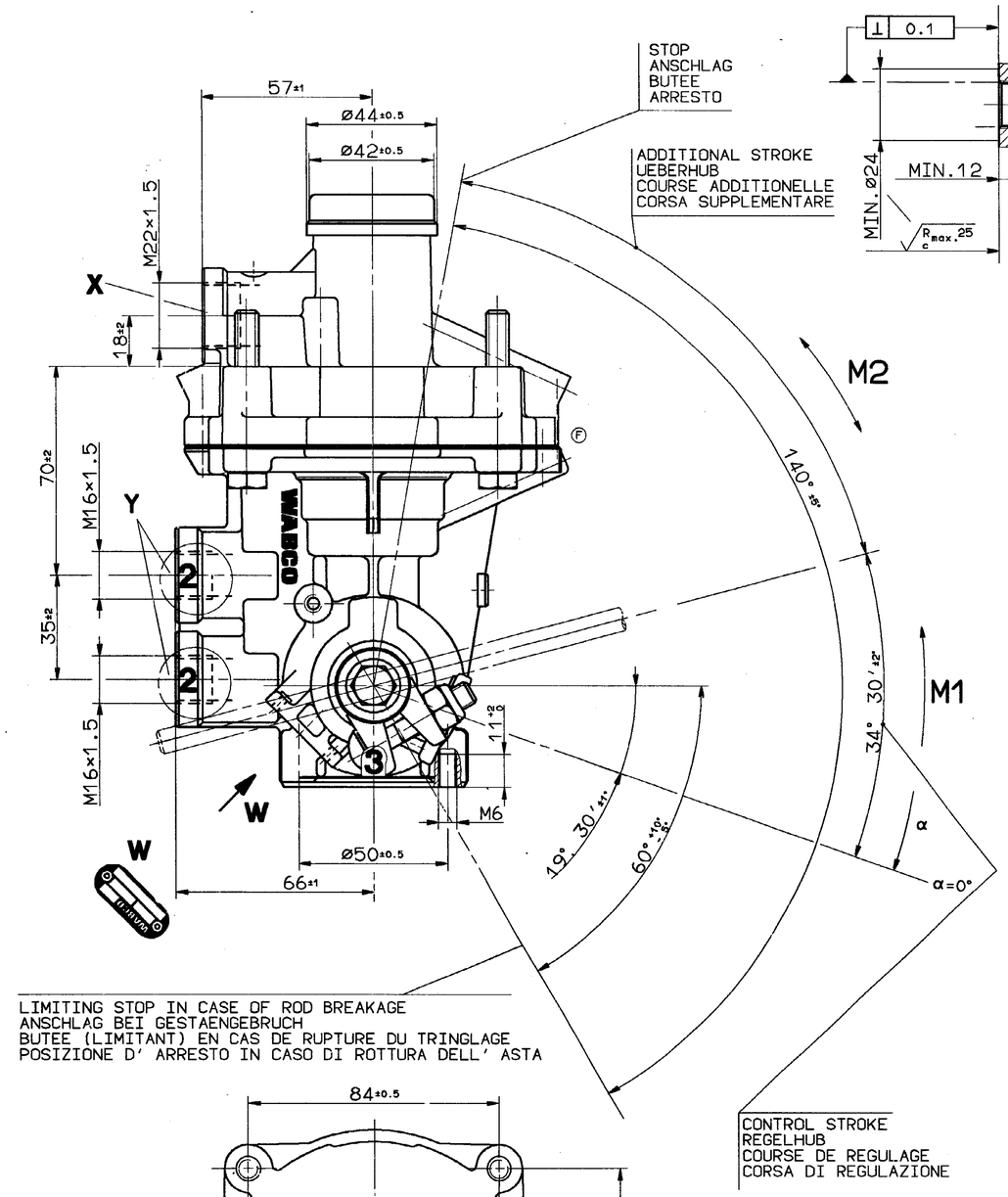

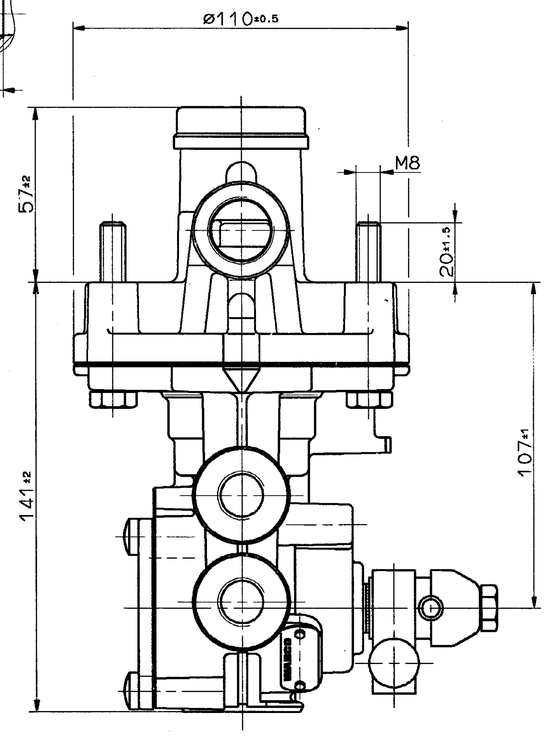

WORKING PRESSURE:
BETRIEBSDRUCK: MAX. p_e 10bar
PRESSION DE SERVICE:
PRESSIONE D'ESERCIZIO:

THERMAL RANGE OF APPLICATION:
THERMISCHER ANWENDUNGSBEREICH:
GAMME D'APPLICATION THERMIQUE: -40° ...+80° C
CAMPO DI APPLICAZIONE TERMICA:

MEDIUM: AIR
MEDIUM: LUFT
FLUIDE: AIR
FLUIDO: ARIA

1/4 = INLET PRESSURE
EINGESTEUERTER DRUCK
PRESSION D'ALIMENTATION
PRESSIONE DI ALIMENTAZIONE

2 = DELIVERY PRESSURE
AUSGESTEUERTER DRUCK
PRESSION DELIVREE
PRESSIONE EROGATA

3 = EXHAUST
ENTLUEFTUNG
ECHAPPEMENT
SCARICO

TORQUE FOR CONNECTIONS:
ANZUGSMOMENT FUER EINSCHRAUBSTUTZEN: M16×1.5: MAX.30Nm
COUPLE DE SERRAGE DES RACCORDS: M22×1.5: MAX.45Nm
COPPIA DI SERRAGGIO DEI RACCORDI:

INSTALLATION POSITION AS DRAWN
EINBAULAGE WIE GEZEICHNET
POSITION D'INSTALLATION SUIVANT DESSIN
POSIZIONE DI MONTAGGIO COME DISEGNATO

M1 = NECESSARY DISPLACING MOMENT:
ERFORDERLICHES VERSTELLMOMENT: 1.7 Nm (p_1 =0bar)
COUPLE NECESSAIRE AU MOUVEMENT:
COPPIA DI REGOLAZIONE NECESSARIA:

M2 = ADMISSIBLE DISPLACING MOMENT:
ZULAESSIGES VERSTELLMOMENT: 20 Nm
ADMISSIBLE MAXI AU MOUVEMENT:
COPPIA DI REGOLAZIONE AMMESSA:

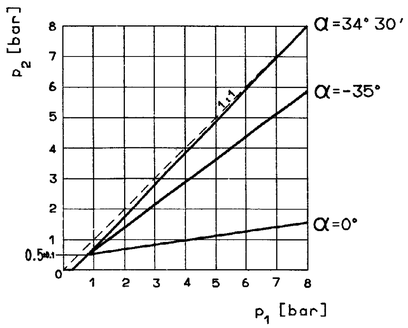

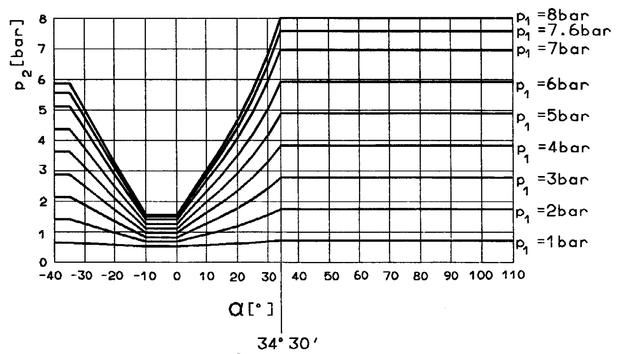

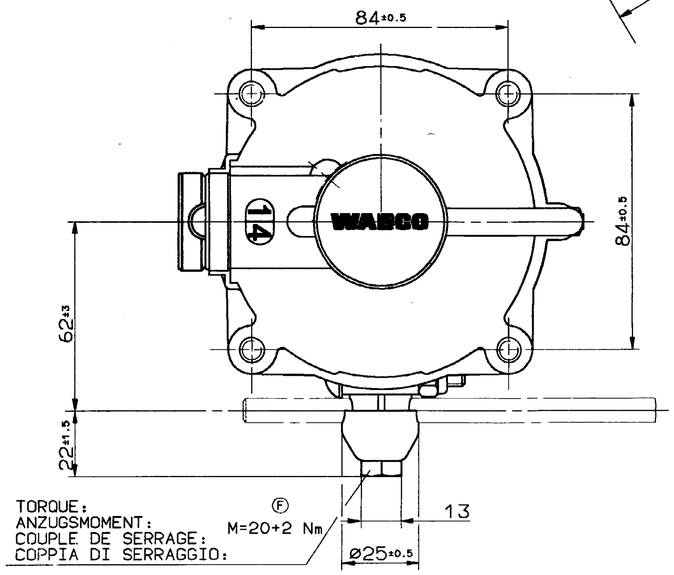

TORQUE:
ANZUGSMOMENT:
COUPLE DE SERRAGE:
COPPIA DI SERRAGGIO:
Ⓕ M=20+2 Nm

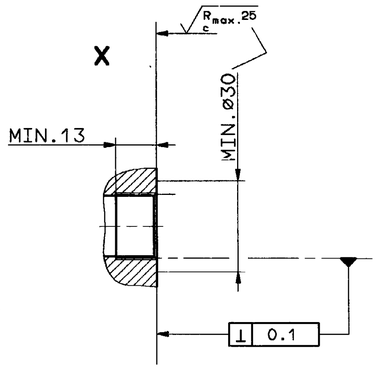

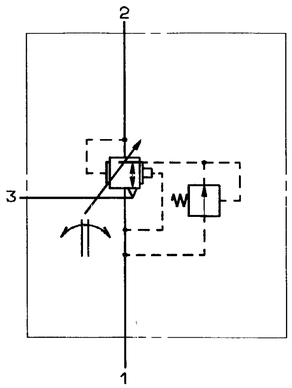

GENERAL SPECIFICATION: JED-334						
FURTHER TECHNICAL DATA:						
CODE FOR DOCUMENT:	SHEET: TO					
GENERAL TOLERANCES						
CLASS 1)	RANGE OF NOMINAL DIMENSIONS (± mm) ≤50	>50 ≤180	>180 ≤400	>400	∢	
FINE	0.5	1.0	1.5	2.0		
MEDIUM ×	1.0	2.0	3.0	4.0	± 3°	
COARSE	2.0	3.5	5.0	6.5		
TAPPED HOLES ACC. ISO 4039 / JED-152						
1) TOLERANCE CLASS APPLIED CROSSMARKED						

DCN-NO.	REV.	DATE
039406	3× F	90-10-30

100mm

COPYRIGHT

DATE	SIGNATURE
DRAWN 90-10-30	BRINK
CHECKED	MENZE/DEI.
STANDARDIZATION	HEINE

WABCO

AUTOM.LOAD-SENSING VALVE
AUTOM.BREMSKRAFTREGLER
CORRECTEUR DE FREINAGE AUTOM.
REGULATORE DI FRENATURA AUTOM

MASS	SCALE	PRODUCT IDENTIFICATION NO.	CODE FOR DOCUMENT	SHEET
1.3 kg	1:1	475 713 000 0	605	1/1
SIZE	T.R.I.			
A 1	140		CODE FOR SHAPE	REPLACEMENT FOR 475 713 000 0 (F) DF 86-01-03

EXPERT CODE 7 4 4 TYPE OF PRODUCT 0 0 X

1609/016/C/09.92

605/633