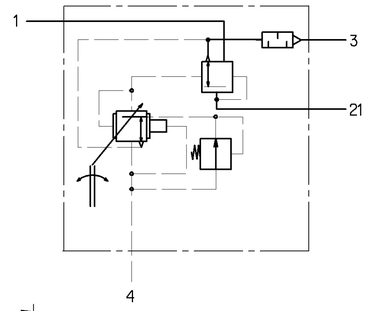

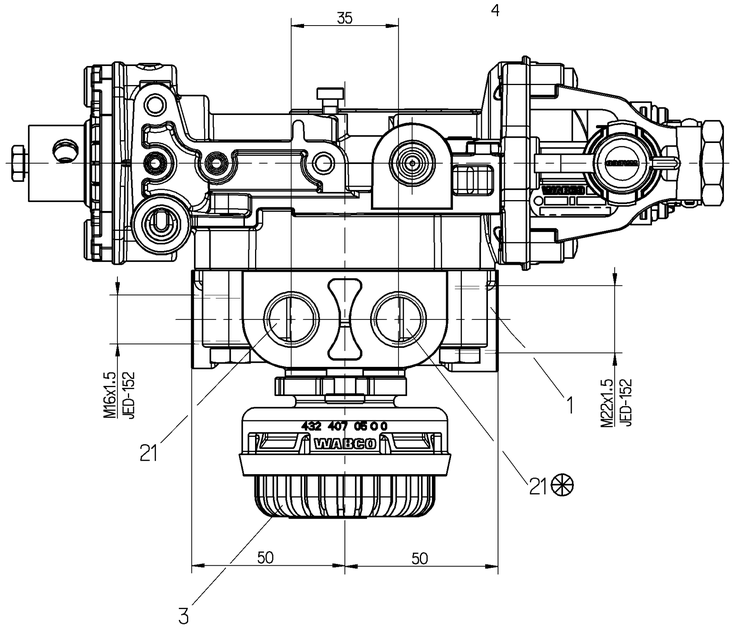

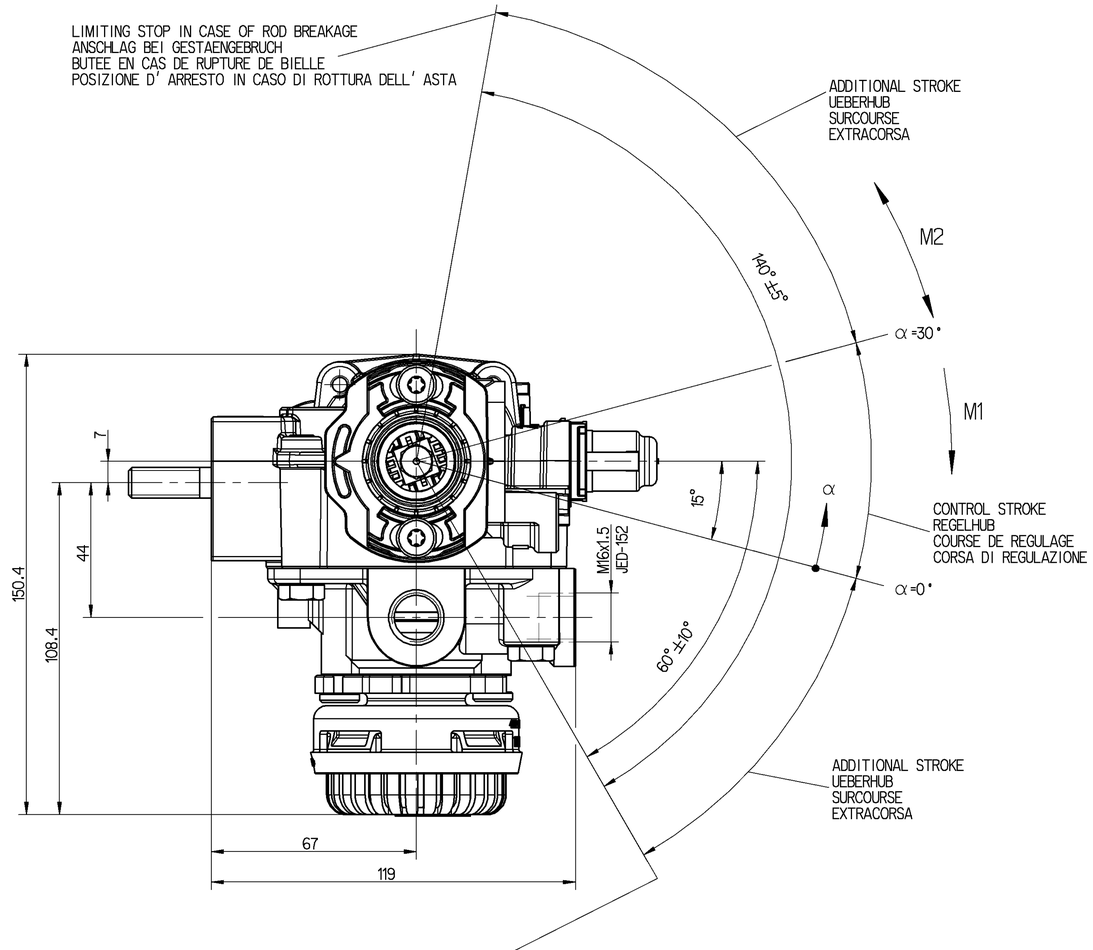

THERMAL RANGE OF APPLICATION :
THERMISCHER ANWENDUNGSBEREICH :
BAMME D' APPLICATION THERMIQUE :
CAMPO DI APPLICAZIONE TERMICA : -40°... +80° C

MEDIUM : AIR
MEDIUM : LUFT
FLUIDE : AIR
FLUIDO : ARIA

1= SUPPLY
VORRAT
ALIMENTATION
ALIMENTAZIONE
MAX. pe 13 bar

21= DELIVERY PRESSURE
AUSGESTEUERTER DRUCK
PRESSION DELIVREE
PRESSIONE EROGATA

3= EXHAUST
ENTLUEFTUNG
ECHAPPEMENT
SCARICO

1/4= CONTROL PRESSURE
STEUERDRUCK
PRESSION DE COMMANDE
PRESSIONE DI COMANDO
MAX. pe 10 bar
TEMPORARILY
KURZZEITIG
DE COURTE DUREE
BREVE TEMPO SOLO
MAX. pe 13 bar

INSTALLATION POSITION AS DRAWN
EINBAULAGE WIE GEZEICHNET
POSITION D'INSTALLATION SUIVANT DESSIN
POSIZIONE DI MONTAGGIO COMO DISEGNATO

M1= NECESSARY DISPLACING MOMENT :
ERFORDERLICHES VERSTELLMOMENT : 1.1 Nm (p4 = 10 bar)
COUPLE NECESSAIRE AU MOUVEMENT :
COPPIA DI REGOLAZIONE NECESSARIA:

M2= PERMISSIBLE ADJUSTING TORQUE :
ZULAESSIGES VERSTELLMOMENT : 15 Nm
COUPLE MAXI ADMIS POUR AJUSTEMENT:
COPPIA DI REGOLAZIONE AMMESSA :

TORQUE FOR CONNECTIONS:
ANZUGSMOMENT FUER EINSCHRAUBSTUTZEN: M16 x 1.5 : Mmax. = 34 Nm
COUPLE DE SERRAGE DES RACCORDS: M22 x 1.5 : Mmax. = 53 Nm
COPPIA DI SERRAGGIO DEI RACCORDI:

TORQUE:
ANZUGSMOMENT: 7±2 Nm
COUPLE DE SERRAGE:
COPPIA DI SERRAGGIO:

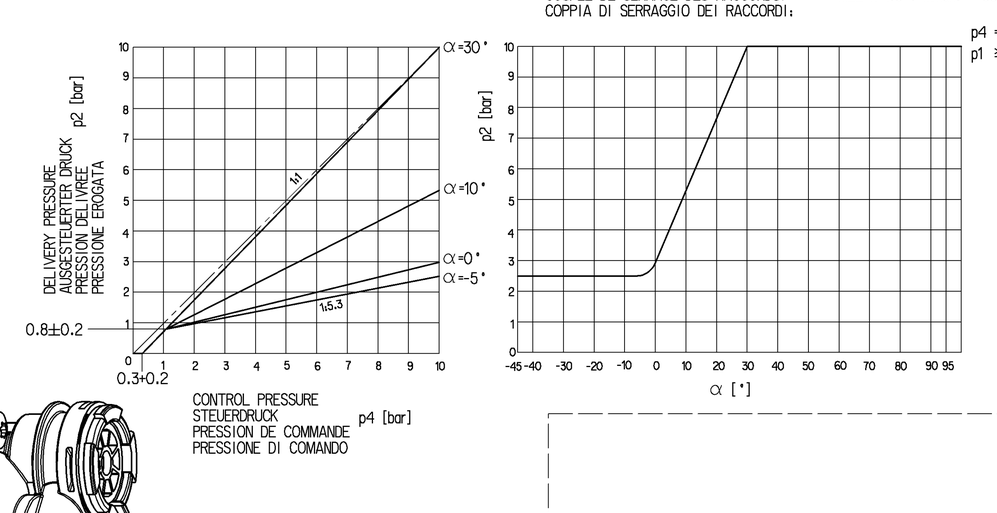

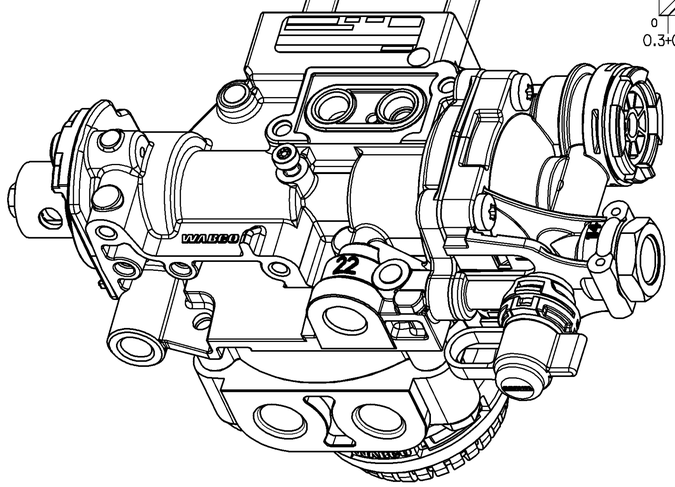

GENERAL SPECIFICATION: JED-334-0					
FURTHER TECHNICAL DATA:					
DOC. CODE:		SHEET: TO			
GENERAL TOLERANCES					
	RANGE OF NOMINAL DIMENSIONS (± mm)				
CLASS 1)	≤ 50	> 50 ≤ 180	> 180 ≤ 400	> 400	
FINE	0.5	1.0	1.5	2.0	±3°
MEDIUM	1.0	2.0	3.0	4.0	
COARSE X	2.0	3.5	5.0	6.5	
TAPPED HOLES ACC. ISO 4039 / JED-152					
1) TOLERANCE CLASS APPLIED CROSSMARKED					

DCN-NO.	REV.	DATE

Pro/ENGINEER DRAWING COPYRIGHT

DATE	SIGNATURE
DRAWN	
04-10-14	HAUKE
CHECKED	
	FAUCK
EXPERT CODE	
742	

MASS	SCALE	PRODUCT IDENTIFICATION NO.	DOC. CODE	SHEET
1.6 KG	1:1	475 720 008 0	605	1/1
SIZE	TRI			
A I	530			

FUNCTION CODE	SHAPE CODE	PRODUCT TYPE	REPLACEMENT FOR
		0 0	

WABCO

AUTOM.LOAD-SENSING VALVE
AUTOM.BREMSKRAFTREGLER
CORRECTEUR DE FREINAGE AUTOM.
REGULATORE DI FRENATURA AUTOM.

NON È PERMESSO CONDIVIDERE, A TERZI O RIPRODURRE QUESTO DOCUMENTO, NE UTILIZZARE IL CONTENUTO O RIVELARNE LA NATURA, SENZA PRIMA OTTENERE LA PERMISSIONE SCRITTA DELLA WABCO. ESSO DEVE ESSERE RESTITUITO A WABCO SU RICHIESTA.
CONTRARY TO WRITTEN AGREEMENT, THIS DOCUMENT MAY NOT BE SHARED WITH THIRD PARTIES OR REPRODUCED, DISCLOSED, OR MADE AVAILABLE TO THIRD PARTIES. IT MUST BE RETURNED TO WABCO UPON REQUEST.
TOUTE COMMUNICATION OU REPRODUCTION DE CE DOCUMENT, TOUTE EXPLOITATION OU COMMUNICATION DE SON CONTENU OU SON ATTRIBUTION À UN TIERS SANS AUTORISATION ÉCRITE PRÉALABLE DE WABCO EST INTERDITE. CE DOCUMENT DOIT ÊTRE RESTITUÉ À WABCO À TOUTE DEMANDE.
VIETATO COMUNICARE A TERZI O RIPRODURRE QUESTO DOCUMENTO, NE UTILIZZARE IL CONTENUTO O RIVELARNE LA NATURA, SENZA PRIMA OTTENERE LA PERMISSIONE SCRITTA DELLA WABCO. ESSO DEVE ESSERE RESTITUITO A WABCO SU RICHIESTA.
ES WIRD UNTERSAGT, DIESES DOKUMENT AN DRITTE WEITERZUGEBEN UND DESSEN INHALT UNBEFUGT WEITERZUVERWENDEN OHNE VORHERIGE SCHRIFTLICHE ZUSTIMMUNG DER WABCO. DIESES DOKUMENT IST AUF ANFORDERUNG WABCO ZURÜCKZUGEBEN.
CONTRARY TO WRITTEN AGREEMENT, THIS DOCUMENT MAY NOT BE USED OR COMMUNICATED TO THE CONTENTS THEREOF, ARE CONFIDENTIAL WITHOUT EXPRESS WRITTEN AGREEMENT OF WABCO. THIS DOCUMENT MUST BE RETURNED TO WABCO UPON REQUEST.
THIS DOCUMENT MAY NOT BE SHARED WITH THIRD PARTIES OR REPRODUCED, DISCLOSED, OR MADE AVAILABLE TO THIRD PARTIES. IT MUST BE RETURNED TO WABCO UPON REQUEST.
THIS DOCUMENT IS THE SUBJECT OF COPYRIGHT AND OTHER INTELLECTUAL PROPERTY RIGHTS. THIS DOCUMENT MAY NOT BE USED, DISCLOSED OR REPRODUCED WITHOUT WABCO'S PRIOR WRITTEN CONSENT. THIS DOCUMENT MUST BE RETURNED TO WABCO UPON REQUEST.
THIS DOCUMENT MAY NOT BE SHARED WITH THIRD PARTIES OR REPRODUCED, DISCLOSED, OR MADE AVAILABLE TO THIRD PARTIES. IT MUST BE RETURNED TO WABCO UPON REQUEST.
THIS DOCUMENT IS THE SUBJECT OF COPYRIGHT AND OTHER INTELLECTUAL PROPERTY RIGHTS. THIS DOCUMENT MAY NOT BE USED, DISCLOSED OR REPRODUCED WITHOUT WABCO'S PRIOR WRITTEN CONSENT. THIS DOCUMENT MUST BE RETURNED TO WABCO UPON REQUEST.

Drw.: 475720008 0___605

TMI: 475720008 0___A10 0.03+