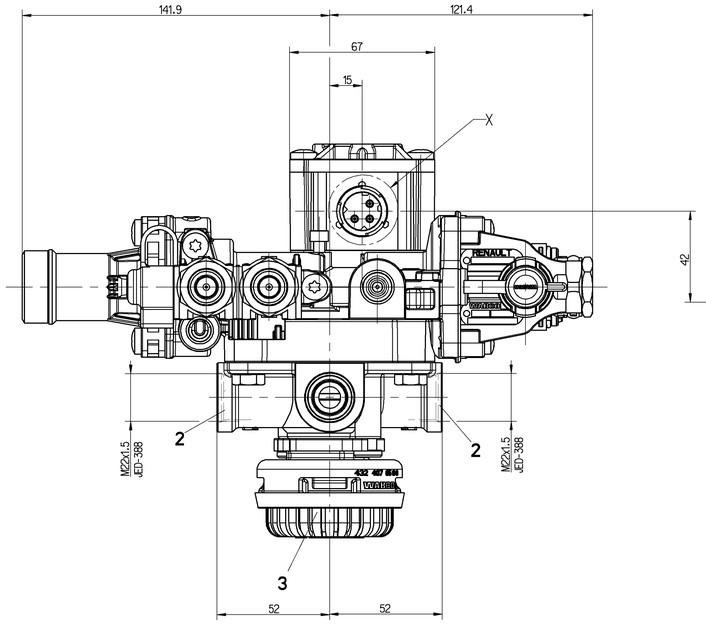

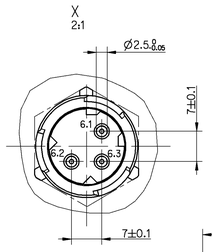

ELECTRICAL CONTROL:
ELEKTRISCHER STEUERANSCHLUSS:
COMMANDE ELECTRIQUE:
COMANDO ELETTRICO:

DIN 72585-A1-3.1-SN/K1

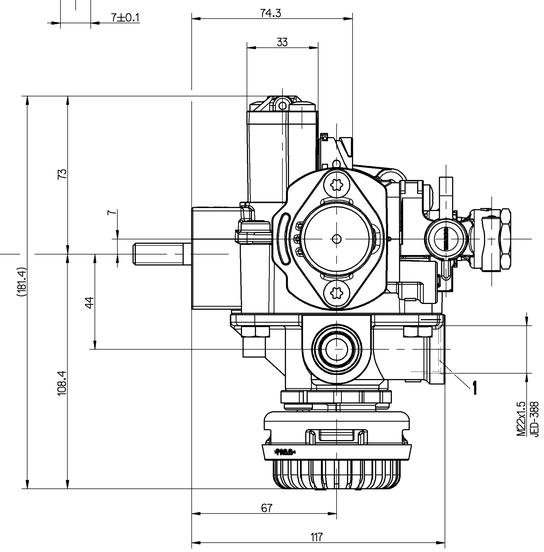

THE VALVE CORRESPONDS TO THE REGULATIONS FOR ELECTROMAGNETIC DEVICES ACCORDING TO VDE 0580
DAS GERAET ENTSPRICHT DEN BESTIMMUNGEN FUER ELEKTROMAGNETISCHE GERAETE NACH VDE 0580
LA VALVE CORRESPOND AUX CONDITIONS POUR DES APPAREILS ELECTROMAGNETIQUES SUIVANT VDE 0580
LA VALVOLA CORRISPONDE ALLE CONDIZIONI PER APPARECCHI ELECTROMAGNETICHI SECONDO VDE 0580

MEDIUM : AIR
MEDIUM : LUFT
FLUIDE : AIR
FLUIDO : ARIA

THERMAL RANGE OF APPLICATION :
THERMISCHER ANWENDUNGSBEREICH :
BAMME D' APPLICATION THERMIQUE : -40°... +80° C
CAMPO DI APPLICAZIONE TERMICA :

INSTALLATION POSITION AS DRAWN
EINBAULAGE WIE GEZEICHNET
POSITION D'INSTALLATION SUIVANT DESSIN
POSIZIONE DI MONTAGGIO COMO DISEGNATO

1= SUPPLY
VORRAT
ALIMENTATION
ALIMENTAZIONE
MAX. pe 13 bar

2= DELIVERY PRESSURE
AUSGESTEUERTER DRUCK
PRESSION DELIVREE
PRESSIONE EROGATA

3= EXHAUST
ENTLUEFTUNG
ECHAPPEMENT
SCARICO

1/4= INLET PRESSURE
EINGESTEUERTER DRUCK
PRESSION D' ALIMENTATION
PRESSIONE DI ALIMENTAZIONE
MAX. pe 10 bar

TEMPORARILY
KURZZEITIG
DE COURTE DUREE
BREVE TEMPO SOLO
MAX. pe 13 bar

41 / 42 = CONTROL PRESSURE
STEUERDRUCK
PRESSION DE COMMANDE
PRESSIONE DI COMANDO
MAX. pe 10 bar

43= TEST VALVE
PRUEFVENTIL
VALVE D' ESSAI
VALVOLA DI PROVA
MAX. pe= 10bar

6.1 / 6.2= / 6.3 ELECTRICAL CONTROL (MAGNET)
ELEKTRISCHER STEUERANSCHLUSS (MAGNET)
COMMANDE ELECTRIQUE (AIMANT)
COMANDO ELETTRICO (MAGNETE)

TORQUE FOR CONNECTIONS:
ANZUGSMOMENT FUER EINSCHRAUBSTUTZEN: M16 x 1.5 : Mmax. = 34 Nm
COUPLE DE SERRAGE DES RACCORDS: M22 x 1.5 : Mmax. = 53 Nm
COPPIA DI SERRAGGIO DEI RACCORDI:

TIGHTENING TORQUE FOR TEST HOSE
ANZUGSMOMENT FUER PRUEFSCHLAUCH
COUPLE DE SERRAGE POUR FLEXIBLE DE CONTROLE Mmax. = 5 Nm
COPPIA DI SERRAGGIO PER TUBO FLESSIBILE DI PROVA

VOLTAGE:
SPANNUNG: 24 V
VOLTAGE:
VOLTAGGIO:

TYPE OF CURRENT : DIRECT CURRENT
STROMART : GLEICHSTROM
NATURE DU COURANT : COURANT CONTINU
NATURA DELLA CORRENTE: CORRENTE CONTINUA

SERVICE CONDITION : DISCONTINUOUS SERVICE
BETRIEBSART : AUSSETZBETRIEB ED 5%/5 min.
CONDITION DU SERVICE : SERVICE DISCONTINUE
CONDIZIONE DI SERVISO : ESERCIZIO DISCONTINUO

RATED CURRENT :
NENNSTROM : 1.65 A
COURANT NOMINAL :
CORRENTE NOMINALE:

DEGREE OF PROTECTION:
SCHUTZART : IP 66/69K
DEGRE DE PROTECTION : IEC 529
GRADO DI PROTEZIONE :

PROTECTION CLASS :
SCHUTZKLASSE : III
CLASSE DE PROTECTION:
CLASSE DI PROTEZIONE:

SOCKET:
GERAETESTECKDOSE: 894 101 649 2
PRISE DE COURANT:
PRESA DI CORRENTE:

CUSTOMER'S NUMBER
KUNDEN-NR.
NO. CLIENT 5010525303
NO. CLIENTE

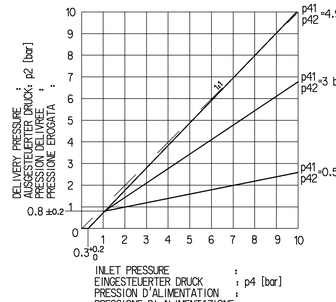

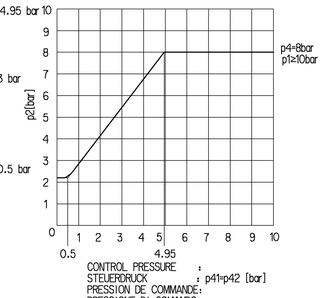

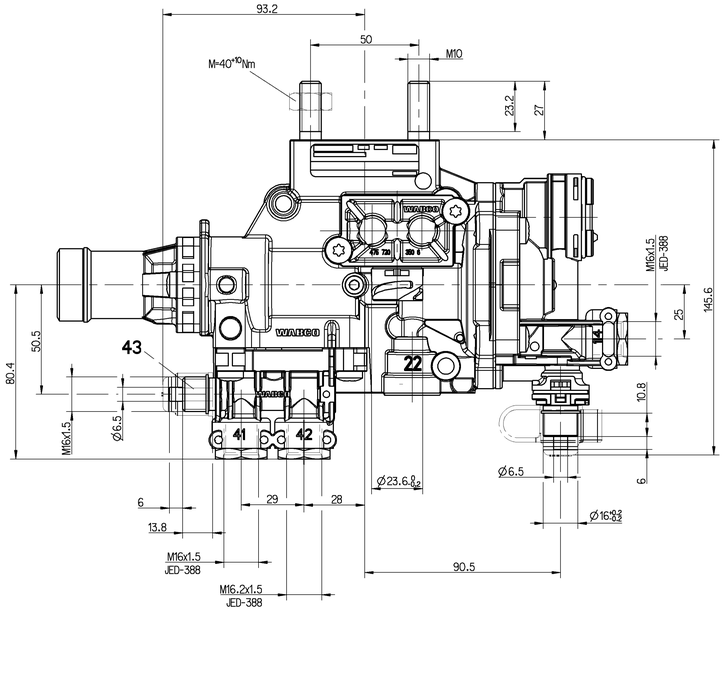

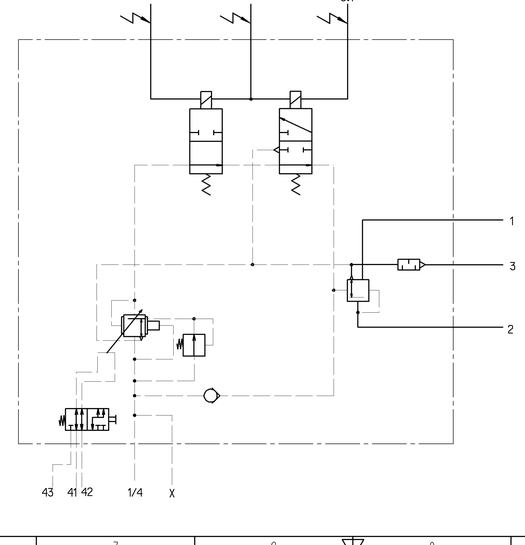

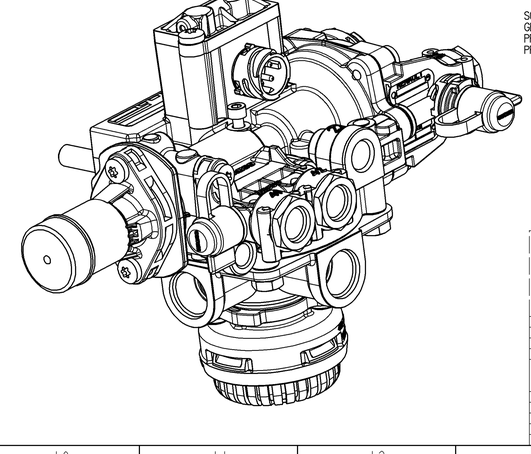

GENERAL SPECIFICATION: JED-334-0								Pro/ENGINEER DRAWING COPYRIGHT			WABCO
FURTHER TECHNICAL DATA:								DATE	SIGNATURE		LOAD-SENSING VALVE
DOC. CODE:	SHEET: TO							DRAWN 01-01-95	HAUKE		AUTOM.BREMSKRAFTREGLER
GENERAL TOLERANCES								CHECKED	FAUCK		CORRECTEUR DE FREINAGE
	RANGE OF NOMINAL DIMENSIONS (± mm)							EXPERT CODE 742			CORRETTORE DI FRENATURA
CLASS 1)	≤ 50	> 50 ≤ 180	> 180 ≤ 400	> 400				MASS 1.8 KG	SCALE 1:1	PRODUCT IDENTIFICATION NO. 475 721 501 0	DOC. CODE 605 / SHEET 1/1
FINE	0.5	1.0	1.5	2.0				SIZE A 0	TRI 140	FUNCTION CODE / SHAPE CODE / PRODUCT TYPE 0 0	REPLACEMENT FOR
MEDIUM	1.0	2.0	3.0	4.0	±3°						
COARSE X	2.0	3.5	5.0	6.5							
TAPPED HOLES ACC. ISO 4039 / JED-152											
1) TOLERANCE CLASS APPLIED CROSSMARKED								DCN-NO.	REV.	DATE	