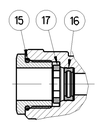

NG-12 VOSS FITTINGS

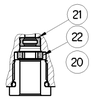

NG-8 VOSS FITTINGS

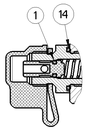

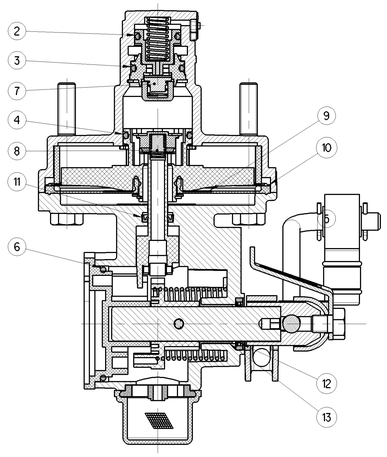

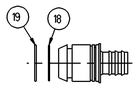

NG-12 CUSTOMER END FITTINGS

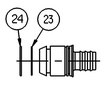

NG-8 CUSTOMER END FITTINGS

REPAIR KIT 300003099 (MSP3/99) CONSISTS OF ITEMS SHOWN

S.No.	CUSTOMER PART No.	WIN PART No.	DESCRIPTION.	QTY.
1		8979801694	O-RING	1
2		8970800424	O-RING	1
3		8979802294	O-RING	1
4		8979802364	O-RING	1
5		8105110554	SPLIT PIN	1
6		8979802444	O-RING	1
7		M311631	BONDED VALVE	1
8		M311610	BONDED VALVE	1
9		M339020	DIAPHRAGM DISC	1
10		M339090	DIAPHRAGM	1
11		M342040	SEAL	1
12		M339330	DUST SEAL	1
13		M339150	SPLIT BUSH	1
14		8979801874	O-RING	1
		M919910	GREASE SACHET	2

REPAIR KIT 300003124 (MSP 3/124) CONSISTS OF ITEMS SHOWN

S.No.	CUSTOMER PART No.	WIN PART No.	DESCRIPTION	QTY
15		8979803224	O-RING	1
16		8953700044	SPRING ELEMENT	1
17		8952266974	RETAINING CLIP	1
18		8979801464	O-RING	1
19		8979801534	O-RING	1
REPAIR KIT REQUIRED IS MAXIMUM 1 IN QUANTITY				

REPAIR KIT 300003123 (MSP 3/123) CONSISTS OF ITEMS SHOWN

S.No.	CUSTOMER PART No.	WIN PART No.	DESCRIPTION	QTY
20		8979803234	O-RING	1
21		8953700054	SPRING ELEMENT	1
22		8952267064	RETAINING CLIP	1
23		8979801454	O-RING	1
24		8979801564	O-RING	1
REPAIR KIT REQUIRED IS MAXIMUM 1 IN QUANTITY				

ASSEMBLY PROCEDURE

(a)

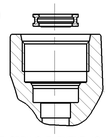

THE SPRING ELEMENT IS INSERTED INTO THE CHAMBER UNDER THE THREAD ROOT OF THE CONNECTION BORE (a) AND (b).

(b)

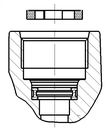

THE RETAINING CLIP IS INTRODUCED SO THAT IT RESTS FLAT ON THE THREAD ROOT (b) AND (c).
THE SPRING ELEMENT AND RETAINING CLIP ARE SYMMETRICAL.

(c)

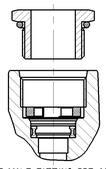

THE MALE FITTING PRE-ASSEMBLED WITH THE PRE-GREASED O-RING TO SEAL THE THREAD IS SCREWED BY HAND INTO THE TAPPED BORE (c) AND TIGHTENED.

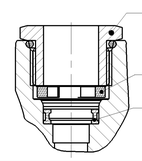

DESCRIPTION	M22x1.5 VOSS PART No.	M16x1.5 VOSS PART No.
MALE NUT WITH O-RING	00 62 03 99 00	00 62 02 99 00
RETAINER CLIP	00 62 01 90 00	00 62 00 90 00
SPRING ELEMENT	00 62 05 99 00	00 62 04 99 00

	PORTS	DESIGNATION	THREADS
2	1	SUPPLY PORT	M22X1.5 / JED-388-O
3	2	DELIVERY PORT	M16X1.5 / JED-388-O

SL.No.	NOTES	
1	PRODUCT FUNCTION AND RELIABILITY	
1.1	WORKING MEDIUM	AIR
1.2	NORMAL WORKING PRESSURE	10 bar
1.3	MAXIMUM OPERATING PRESSURE (TEMPORARILY)	13 bar
1.4	EQUIVALENT FLOW DIAMETER	10 mm
1.5	NOISE LEVEL WHEN TESTED AS PER PS	≤ 72 dBA
1.6	THERMAL RANGE OF APPLICATION	-40°C TO +80°C
1.7	INSTALLATION POSITION	AS DRAWN
1.8	CORROSION RESISTANCE	240 HOURS OF NSS.
1.9	HYSTERISIS	≤ 0.3 bar
1.10	SENSITIVITY	≤ 0.15 bar
2	1= INLET PRESSURE	
	2= DELIVERY PRESSURE	
	3= EXHAUST	
	M1 = NECESSARY DISPLACING MOMENT	1.7 Nm (p1=0 bar)
	M2 = ADMISSIBLE DISPLACING MOMENT	20 Nm
	P = LOCATION REFERS '19.5°' ON ANGLE INDICATOR	
	Q = LOCATION REFERS PROJECTED EDGE ON LOWER BODY	
	O = LOCATION REFERS CENTER OF LEVER CLAMPING RING	
	WHEN P AND Q COINCIDE, THE DELIVERY PRESSURE SHOULD BE 3.7 ±0.25 bar FOR AN INLET PRESSURE OF 6.5 bar WHEN ANGLE BETWEEN OP AND OQ IS 17° ±1° THE DELIVERY PRESSURE SHOULD BE 6.4 ±0.1 bar FOR AN INLET PRESSURE OF 6.5 bar.	
3	MOUNTING OF THIS VALVE SHOULD BE WITHIN ±30° ANGLE WITH RESPECT TO VERTICAL.	
1 4	ROD SHOULD MOVE FREELY WHEN SCREW IS LOOSE AND SHOULD GRIP FIRMLY WHEN SCREW IS TIGHTENED.	
5	QUALITY COMPLIANCE TESTS WILL BE CARRIED OUT REGULARLY AS PER CLAUSE No.17 OF PS	
6	OPEN PORTS/ MALE THREADS ARE FITTED WITH CLOSURE PLUGS/ CLOSURE SLEEVES FOR STORAGE AND TRANSIT PURPOSES	

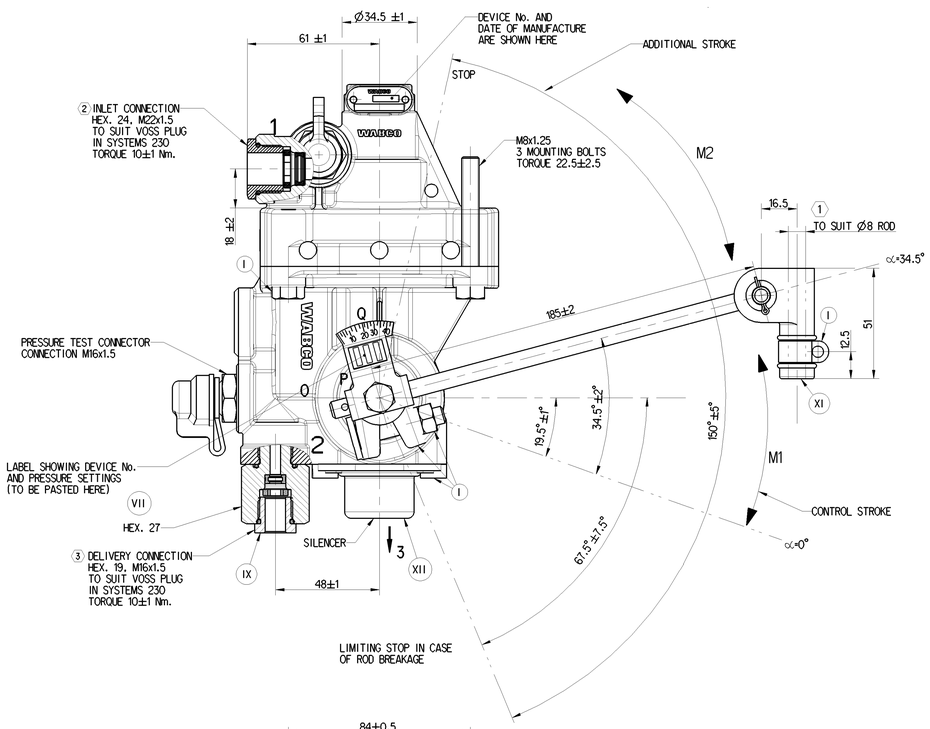

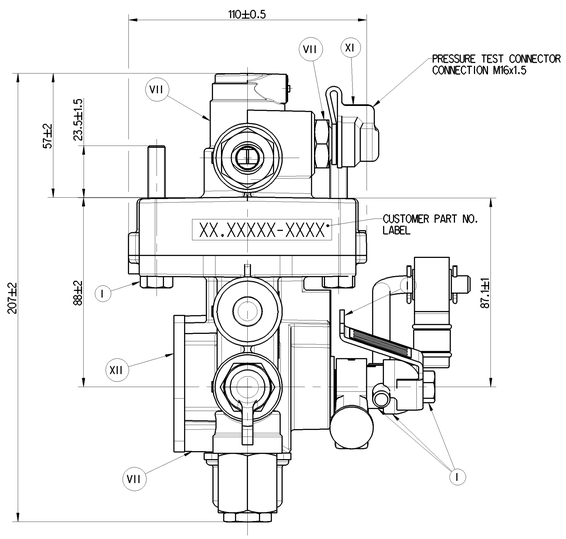

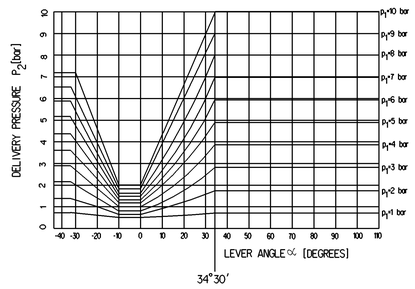

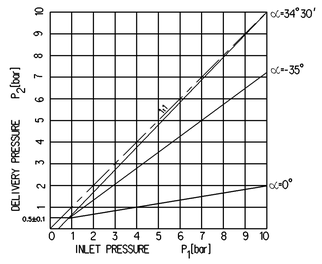

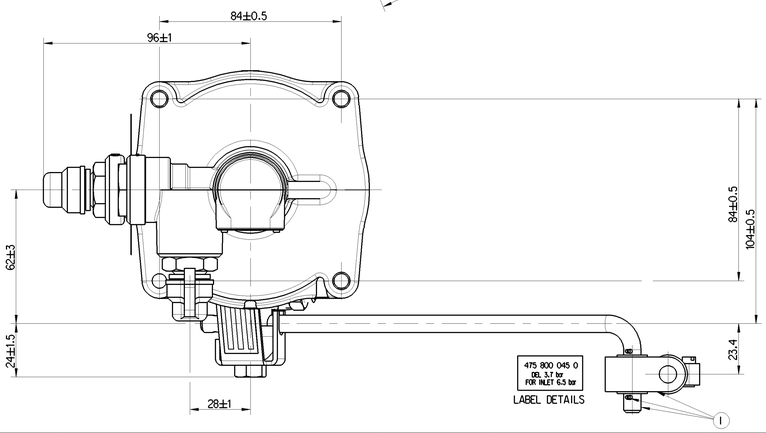

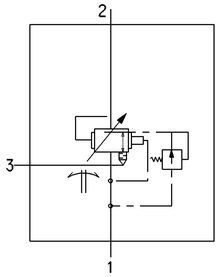

CIRCUIT DIAGRAM
1. INLET
2. DELIVERY
3. EXHAUST

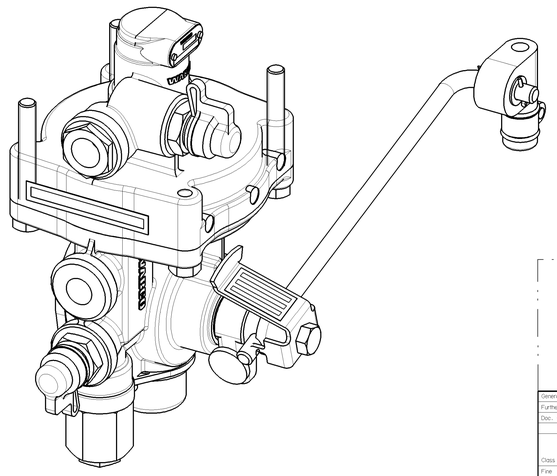

XVII	STEEL	NO TREATMENT
XVI	CAST IRON	PLATED
XV	STEEL	ZINC IRON PLATED
XIV	CAST IRON	NO TREATMENT
XIII	ZINC ALLOY	ANODISED
XII	PLASTIC	NO TREATMENT
XI	RUBBER	NO TREATMENT
X	STAINLESS STEEL	NO TREATMENT
IX	BRASS	NO TREATMENT
VIII	ZINC ALLOY	CHROMATED
VII	ALUMINIUM ALLOY	ANODISED
VI	ALUMINIUM ALLOY	CHROMATED
V	CAST IRON	PAINTED
IV	STEEL	POWDER COATED
III	STEEL	PAINTED
II	STEEL	PHOSPHATED
I	STEEL	ZINC PLATED
PART CODE	MATERIAL	SURFACE PROTECTION

Toda Operación o reproducción de un diseño, bien suministrado o comercializado de los varios cuyo titulares, cual, particularmente, sea la reproducción, distribución, puesta a disposición o comunicación a terceros de dicho diseño o cualquier otra forma de cesión a terceros, sin autorización de WABCO, constituye un acto ilícito de competencia desleal y/o infracción de los derechos de propiedad industrial y/o intelectual de WABCO, que WABCO se reserva el derecho de perseguir, incluyendo la reclamación de daños y perjuicios que pudieran ocasionarse a WABCO como consecuencia de dicho acto.

Any unauthorized use, transmitting, lend, distribute, reproduce, publishing, copy, modify, translate, sell, offer for sale, make available to third parties, or otherwise use or exploit any of the designs, drawings, specifications, or other technical information, in whole or in part, without the express written consent of WABCO, is prohibited and may be prosecuted as a violation of WABCO's intellectual property rights. WABCO reserves the right to seek damages for any such unauthorized use or exploitation.

Tous droits réservés. Toute reproduction, diffusion, mise à disposition ou communication à des tiers, sans autorisation de WABCO, de tout ou partie de ce document, y compris des dessins et modèles, des spécifications, ou autres informations techniques, sans limitation aux droits de propriété intellectuelle et industrielle de WABCO, est interdite et peut faire l'objet de poursuites judiciaires. WABCO se réserve le droit de demander des dommages-intérêts en cas d'utilisation ou d'exploitation non autorisée.

| | | | |