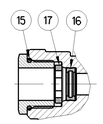

NG-12 VOSS FITTINGS

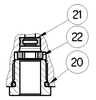

NG-8 VOSS FITTINGS

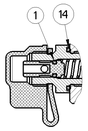

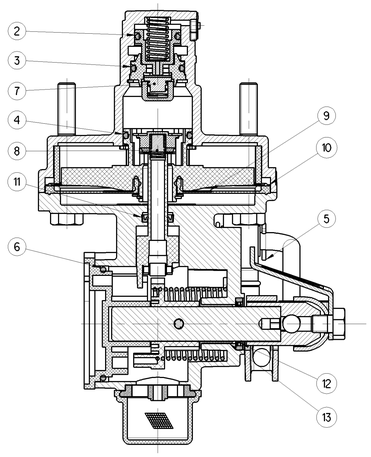

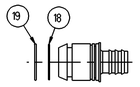

NG-12 CUSTOMER END FITTINGS

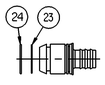

NG-8 CUSTOMER END FITTINGS

REPAIR KIT 300003099 (MSP3/99) CONSISTS OF ITEMS SHOWN

S.No.	CUSTOMER PART No.	WIN PART No.	DESCRIPTION.	QTY.
1		8979801694	O-RING	1
2		8970800424	O-RING	1
3		8979802294	O-RING	1
4		8979802364	O-RING	1
5		8105110554	SPLIT PIN	1
6		8979802444	O-RING	1
7		M311631	BONDED VALVE	1
8		M311610	BONDED VALVE	1
9		M339020	DIAPHRAGM DISC	1
10		M339090	DIAPHRAGM	1
11		M342040	SEAL	1
12		M339330	DUST SEAL	1
13		M339150	SPLIT BUSH	1
14		8979801874	O-RING	1
		M919910	GREASE SACHET	2

REPAIR KIT 300003124 (MSP 3/124) CONSISTS OF ITEMS SHOWN

S.No.	CUSTOMER PART No.	WIN PART No.	DESCRIPTION	QTY
15		8979803224	O-RING	1
16		8953700044	SPRING ELEMENT	1
17		8952266974	RETAINING CLIP	1
18		8979801464	O-RING	1
19		8979801534	O-RING	1
REPAIR KIT REQUIRED IS MAXIMUM 1 IN QUANTITY				

REPAIR KIT 300003123 (MSP 3/123) CONSISTS OF ITEMS SHOWN

S.No.	CUSTOMER PART No.	WIN PART No.	DESCRIPTION	QTY
20		8979803234	O-RING	1
21		8953700054	SPRING ELEMENT	1
22		8952267064	RETAINING CLIP	1
23		8979801454	O-RING	1
24		8979801564	O-RING	1
REPAIR KIT REQUIRED IS MAXIMUM 1 IN QUANTITY				

ASSEMBLY PROCEDURE

(a)

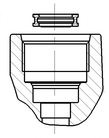

THE SPRING ELEMENT IS INSERTED INTO THE CHAMBER UNDER THE THREAD ROOT OF THE CONNECTION BORE (a) AND (b).

(b)

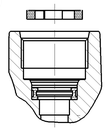

THE RETAINING CLIP IS INTRODUCED SO THAT IT RESTS FLAT ON THE THREAD ROOT (b) AND (c).
THE SPRING ELEMENT AND RETAINING CLIP ARE SYMMETRICAL.

(c)

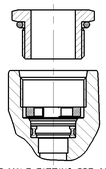

THE MALE FITTING PRE-ASSEMBLED WITH THE PRE-GREASED O-RING TO SEAL THE THREAD IS SCREWED BY HAND INTO THE TAPPED BORE (c) AND TIGHTENED.

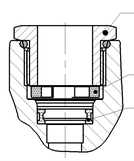

DESCRIPTION	M22x1.5 VOSS PART No.	M16x1.5 VOSS PART No.
MALE NUT WITH O-RING	00 62 03 99 00	00 62 02 99 00
RETAINER CLIP	00 62 01 90 00	00 62 00 90 00
SPRING ELEMENT	00 62 05 99 00	00 62 04 99 00

	PORTS	DESIGNATION	THREADS
2	1	SUPPLY PORT	M22X1.5 / JED-388-O
3	2	DELIVERY PORT	M16X1.5 / JED-388-O

SL.No.	NOTES	
1	PRODUCT FUNCTION AND RELIABILITY	
1.1	WORKING MEDIUM	AIR
1.2	NORMAL WORKING PRESSURE	10 bar
1.3	MAXIMUM OPERATING PRESSURE (TEMPORARILY)	13 bar
1.4	EQUIVALENT FLOW DIAMETER	10 mm
1.5	NOISE LEVEL WHEN TESTED AS PER PS	≤ 72 dBA
1.6	THERMAL RANGE OF APPLICATION	-40°C TO +80°C
1.7	INSTALLATION POSITION	AS DRAWN
1.8	CORROSION RESISTANCE	240 HOURS OF NSS.
1.9	HYSTERISIS	≤ 0.3 bar
1.10	SENSITIVITY	≤ 0.15 bar
2	1= INLET PRESSURE	
	2= DELIVERY PRESSURE	
	3= EXHAUST	
	M1 = NECESSARY DISPLACING MOMENT	1.7 Nm (p1=0 bar)
	M2 = ADMISSIBLE DISPLACING MOMENT	20 Nm
	P = LOCATION REFERS '19.5°' ON ANGLE INDICATOR	
	Q = LOCATION REFERS PROJECTED EDGE ON LOWER BODY	
	O = LOCATION REFERS CENTER OF LEVER CLAMPING RING	
	WHEN P AND Q COINCIDE, THE DELIVERY PRESSURE SHOULD BE 3.7 ±0.25 bar FOR AN INLET PRESSURE OF 6.5 bar WHEN ANGLE BETWEEN OP AND OQ IS 17° ±1° THE DELIVERY PRESSURE SHOULD BE 6.4 ±0.1 bar FOR AN INLET PRESSURE OF 6.5 bar.	
3	MOUNTING OF THIS VALVE SHOULD BE WITHIN ±30° ANGLE WITH RESPECT TO VERTICAL.	
1 4	ROD SHOULD MOVE FREELY WHEN SCREW IS LOOSE AND SHOULD GRIP FIRMLY WHEN SCREW IS TIGHTENED.	
5	QUALITY COMPLIANCE TESTS WILL BE CARRIED OUT REGULARLY AS PER CLAUSE No.17 OF PS	
6	OPEN PORTS/ MALE THREADS ARE FITTED WITH CLOSURE PLUGS/ CLOSURE SLEEVES FOR STORAGE AND TRANSIT PURPOSES	

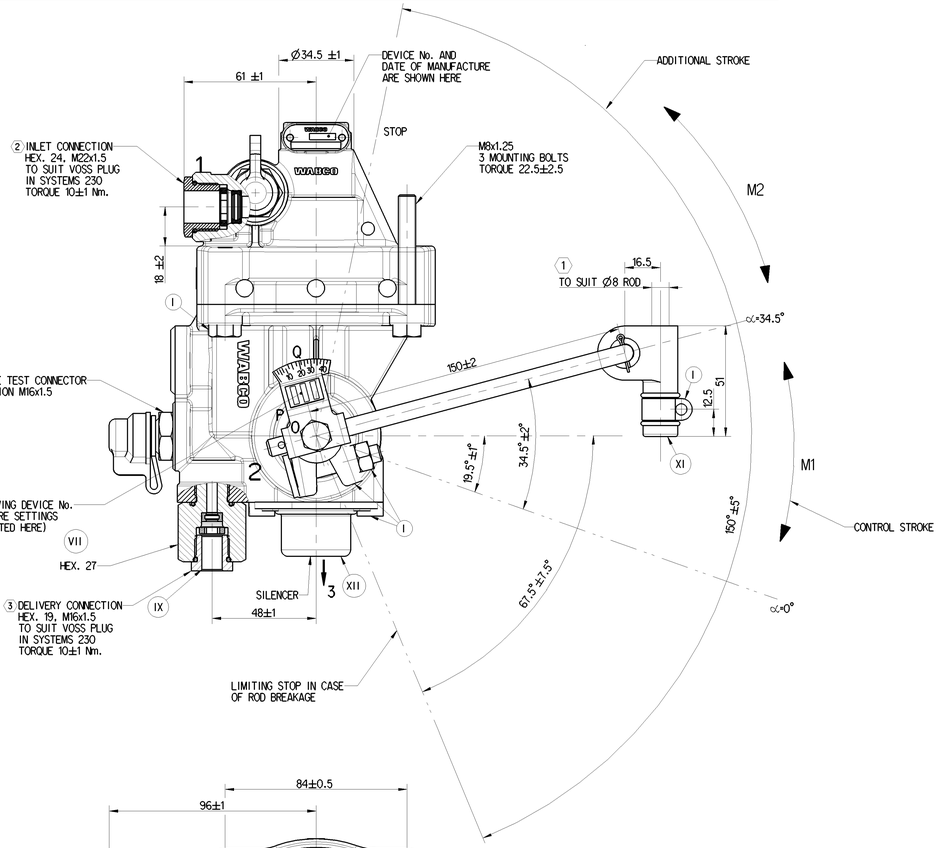

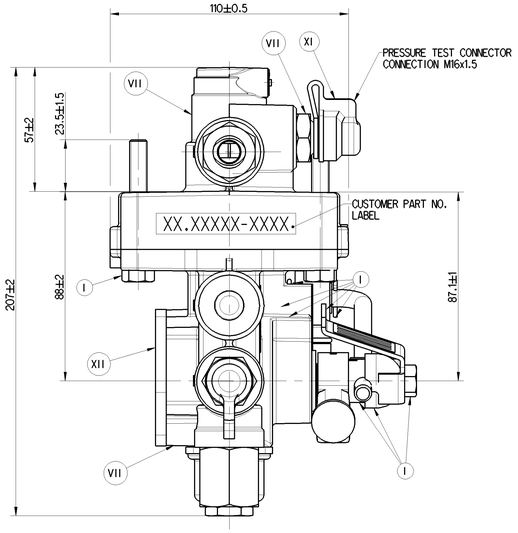

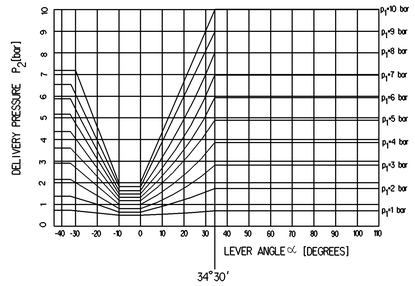

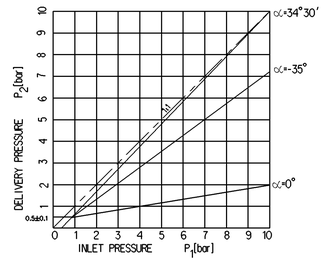

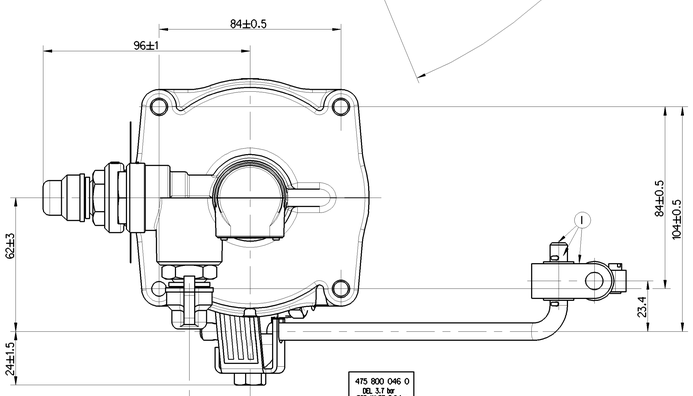

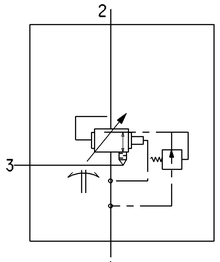

CIRCUIT DIAGRAM
1. INLET
2. DELIVERY
3. EXHAUST

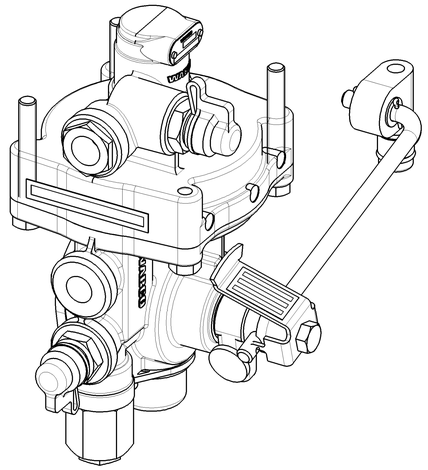

475 800 046 0
DEL 3.7 bar
FOR INLET 6.5 bar

LABEL DETAILS

PART CODE	MATERIAL	SURFACE PROTECTION
XVII	STEEL	NO TREATMENT
XVI	CAST IRON	PLATED
XV	STEEL	ZINC IRON PLATED
XIV	CAST IRON	NO TREATMENT
XIII	ZINC ALLOY	ANODISED
XII	PLASTIC	NO TREATMENT
XI	RUBBER	NO TREATMENT
X	STAINLESS STEEL	NO TREATMENT
IX	BRASS	NO TREATMENT
VIII	ZINC ALLOY	CHROMATED
VII	ALUMINIUM ALLOY	ANODISED
VI	ALUMINIUM ALLOY	CHROMATED
V	CAST IRON	PAINTED
IV	STEEL	POWDER COATED
III	STEEL	PAINTED
II	STEEL	PHOSPHATED
I	STEEL	ZINC PLATED

This Drawing is transmitted to you strictly in confidence. Such expression is permissible as you unless said benefits, and / or patent(s) expires. Our engagement in this regard continues and also extend in respect to the above mentioned benefits, and / or patent(s) expires. Our engagement in this regard continues and also extend in respect to the above mentioned benefits, and / or patent(s) expires. Copyright in this document is reserved. Without our express written consent, it may not be copied or made available to third parties. Copyright © WABCO. All Rights Reserved. Copyright © WABCO. All Rights Reserved.

General Specification	JED-334-1 , Size ISO 14405 LP	
Further Technical Data	475 800 046 0	
Doc. Code: 035	Sheet: 01 To 12	

General Tolerances JED-261

		Range of Nominal Dimensions (in mm)				
		1- 50	> 180	> 400	> 400	
Class (1)		≤ 50	≤ 180	≤ 400		
Fine		0.5	1.0	1.5	2.0	
Medium	X	1.0	2.0	3.0	4.0	±3°
Coarse		2.0	3.5	5.0	6.5	

Tapped Holes acc. -
(1) Tolerance Class Applied Crosswarded

SAFETY CHARACTERISTICS	0
SIGNIFICANT CHARACTERISTICS	0

Copyright WABCO®

Date	Signature
Drawn 2018-04-18	Prodeep
Checked 2018-04-20	Sathesh R
Appr. R SATHESH KUMAR	

WABCO

AUTOMATIC LOAD SENSING VALVE

Mass 1.929 KG	Scale 1:1	Material No. 475 800 046 0	Date of first issue 2018-04-20
Size A 0	CAD System CREO	EDB No. - / Revision - / Techn. Repl. -	Doc.Code 005 / Language EN / Sheet 1/1
			Replacement for -

100mm