01	SUCTION PORT SAUGANSCHLUSS ORIFICE D' ASPIRATION ASPIRAZIONE
21	DISCHARGE PORT "RAIL 5/6" DRUCKANSCHLUSS "GASSE 5/6" REFOULEMENT "SELECTION 5/6" ORIFIZIO DI MANDATA "RANGO 5/6"
22	DISCHARGE PORT "RAIL R" DRUCKANSCHLUSS "GASSE R" REFOULEMENT "SELECTION R" ORIFIZIO DI MANDATA "RANGO R"
23	DISCHARGE PORT "GEAR R/2/4/6" DRUCKANSCHLUSS "GANG R/2/4/6" REFOULEMENT "PASSAGE R/2/4/6" ORIFIZIO DI MANDATA "MARCIA R/2/4/6"
24	DISCHARGE PORT "GEAR 1/3/5" DRUCKANSCHLUSS "GANG 1/3/5" REFOULEMENT "PASSAGE 1/3/5" ORIFIZIO DI MANDATA "MARCIA 1/3/5"
25	DISCHARGE PORT "CLUTCH" DRUCKANSCHLUSS "KUPPLUNG" REFOULEMENT "EMERAYAGE" ORIFIZIO DI MANDATA "FRIZIONE"
51	RETURN FLOW RUECKLAUF RETOUR RITORNO

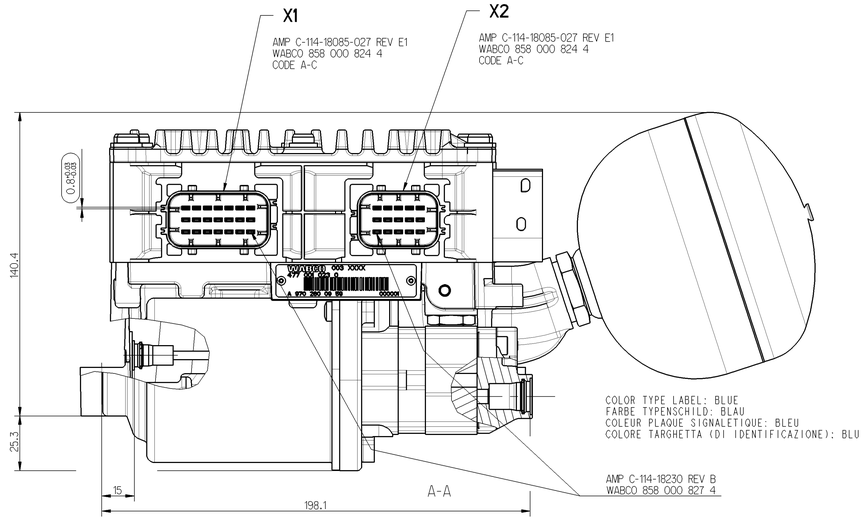

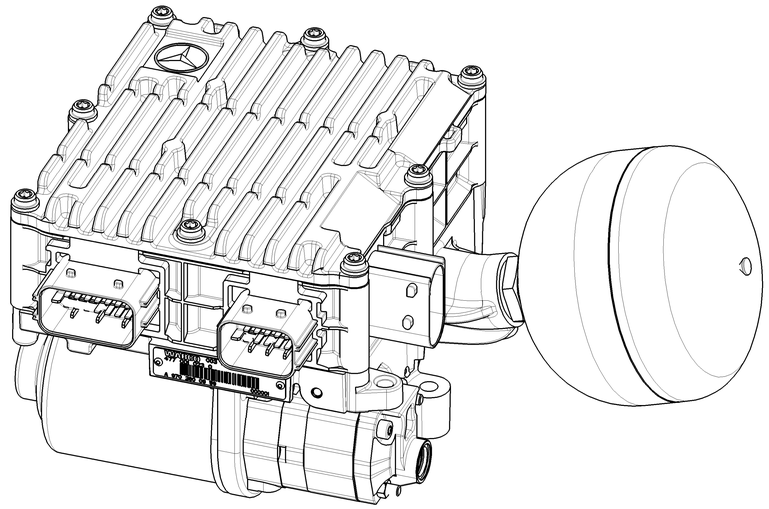

C-C

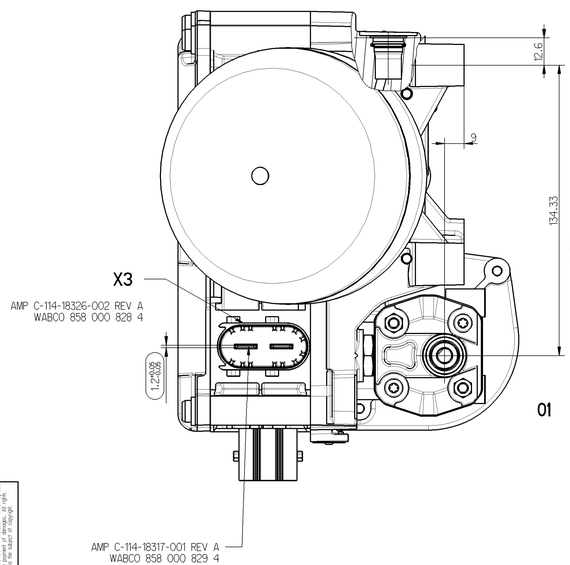

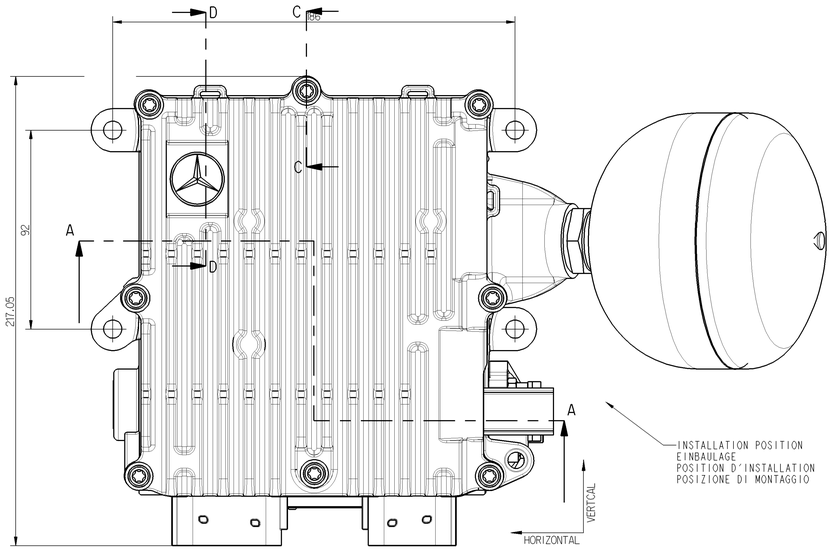

D-D

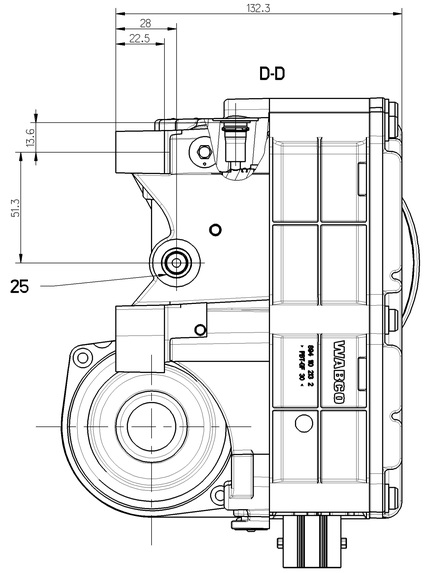

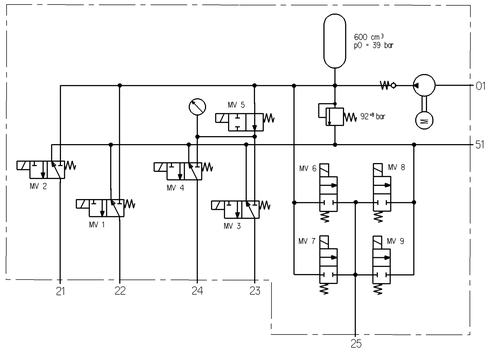

01, 51

21, 22, 23, 24, 25

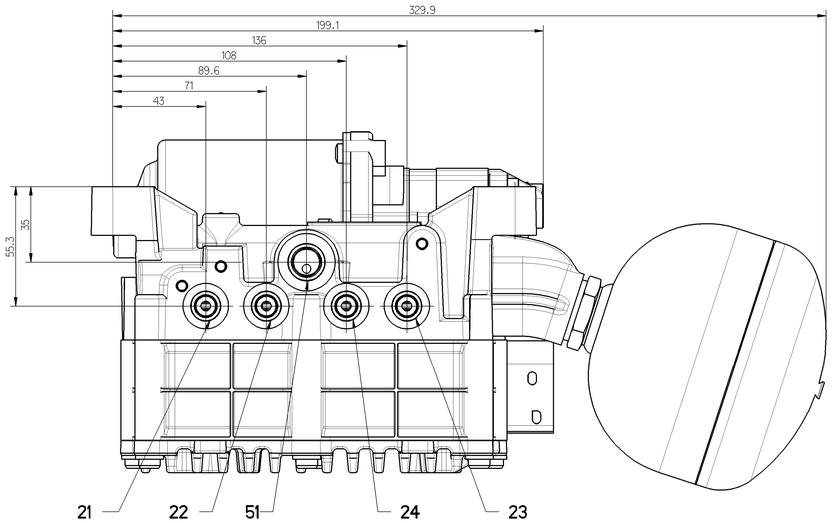

X1	CENTRAL CONNECTOR VEHICLE ZENTRALSTECKER FAHRZEUG CONNECTEUR CENTRAL VEHICULE CONNETTORE CENTRALE VEICOLO
X2	CENTRAL CONNECTOR GEARBOX ZENTRALSTECKER GETRIEBE CONNECTEUR CENTRAL VEHICULEBOITE DE VITESSES CONNETTORE CENTRALE CAMBIO
X3	CENTRAL CONNECTOR HIGH CURRENT ZENTRALSTECKER HOCHSTROM CONNECTEUR CENTRAL COURANT HAUT CONNETTORE CENTRALE ALTA CORRENTE

TECHNICAL DATA
TECHNISCHE DATEN}
CARACTERISTIQUES TECHNIQUES
CARATTERISTICHE TECNICHE

WORKING MEDIUM BETRIEBSMEDIUM FLUIDE DE UTILISATION FLUIDO DI ESERCIZIO	PENTOSIN CHF 11S
WORKING PRESSURE BETRIEBSDRUCK PRESSION DE UTILISATION PRESSIONE DI ESERCIZIO	60 . . . . . 82 BAR
WORKING PRESSURE MAX. MAX. BETRIEBSDRUCK PRESSION DE UTILISATION MAX. PRESSIONE DI ESERCIZIO MAX.	100 BAR
TERMAL RANGE OF APPLICATION THERMISCHER ANWENDUNGSBEREICH PLAGE DE TEMPERATURE EN UTILISATION CAMPO TERMICO DI APPLICAZIONE	-30 °C . . . . . +120 °C
VOLTAGE BETRIEBSSPANNUNG TENSION TENSIONE	12V

INSTALLATION POSITION AS DRAWN
EINBAULAGE WIE GEZEICHNET
POSITION D'INSTALLATION SUIVANT DESSIN
POSIZIONE DI MONTAGGIO COMO DISEGNATO

Assambling Torque
Montage Drehmoment
Couple d'asemblage
Coppia mofaggio — 23 Nm ± 10 %

PVC PACKAGING NOT PERMISSIBLE
KEINE PVC VERPACKUNG ZULAESSIG
CPV EMBALLAGE NON ADMIS
CPV IMBALLAGGIO NON AMMESSA

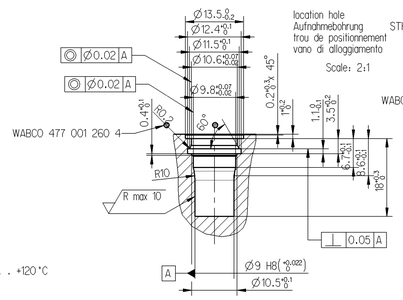

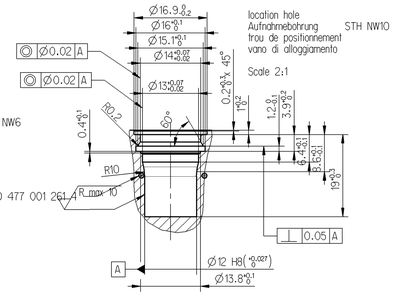

General Specification: JED-334-O							
Further Technical Data:							
Doc. Code:			Sheet:		To		
General Tolerances JED-261							
		Range of Nominal Dimensions (± mm)					
Class 1)		≤ 50	> 50 ≤ 150	> 150 ≤ 400	> 400		
Fine		0.5	1.0	1.5	2.0	±3°	
Medium	X	1.0	2.0	3.0	4.0		
Coarse		2.0	3.5	5.0	6.5		
Tapped Holes acc.:							
1) Tolerance Class Applied Crossmarked							

DCN-No.	Rev.	Date
State of Revision		

Copyright WABCO ®

	Date	Signature
Drawn	2006-08-08	Keipe
Checked	2006-08-23	Klik
Expert		Keipe

WABCO

CENTRAL UNIT
ZENTRALEINHEIT AGS 2 (12V)
UNITE CENTRALE
UNITA CENTRALE

Mass	Scale	Material No.		
9.600 kg	1:1	477 001 023 0	WABCO 18. No.: 477 001 023 0	
Size	TPI		Doc.-Code	Language	Sheet
A 0	570		605	en/de fr/it	1/1
Function Code	CAD System	Prod.-Type	Replacement for	
	Pro/E	0 2 X	477 001 021 0	

100mm