	X3:	IN/OUT 2 EINGANG/AUSGANG 2 ENTREE/SORTIE 2 ENTRATA/USCITA 2	
	480 102 010 0	480 102 014 0	480 102 015 0
IN/OUT 2. 1	N.C.	PLUS SWITCH PORT 3 PLUS SCHALTAUSGANG 3 PLUS CONTACTEUR PILOTAGE 3 PLUS INTERRUTTORE COMANDO 3	PLUS SWITCH PORT 3 PLUS SCHALTAUSGANG 3 PLUS CONTACTEUR PILOTAGE 3 PLUS INTERRUTTORE COMANDO 3
IN/OUT 2. 2	N.C.	GND ELECTROVALVE GND ELEKTROVENTIL GND ELECTROVALVE GND ELEKTRVALVOLA	GND ELECTROVALVE GND ELEKTROVENTIL GND ELECTROVALVE GND ELEKTRVALVOLA
IN/OUT 2. 3	N.C.	ANALOGUE INPUT 0V TO 5V ANALOGEINGANG 0V BIS 5V ENTREE ANALOGIQUE 0V A 5V ENTRADA ANALOGICA 0V A5V	ANALOGUE INPUT 0V TO 5V ANALOGEINGANG 0V BIS 5V ENTREE ANALOGIQUE 0V A 5V ENTRADA ANALOGICA 0V A5V
IN/OUT 2. 4	N.C.	SWITCHING INPUT SCHALTEINGANG ENTREE COMMUTATION ENTRATA COMMUTATZIONE	SWITCHING INPUT SCHALTEINGANG ENTREE COMMUTATION ENTRATA COMMUTATZIONE
IN/OUT 2. 5	PLUS ELECTROVALVE OUT PLUS ELEKTROVENTIL PLUS ELECTROVALVE PLUS ELEKTRVALVOLA	PLUS ELECTROVALVE OUT PLUS ELEKTROVENTIL PLUS ELECTROVALVE PLUS ELEKTRVALVOLA	PLUS ELECTROVALVE OUT PLUS ELEKTROVENTIL PLUS ELECTROVALVE PLUS ELEKTRVALVOLA
IN/OUT 2. 6	GND ELECTROVALVE GND ELEKTROVENTIL GND ELECTROVALVE GND ELEKTRVALVOLA	GND ELECTROVALVE GND ELEKTROVENTIL GND ELECTROVALVE GND ELEKTRVALVOLA	N.C.
IN/OUT 2. 7	N.C.	CAN 2-H	N.C.
IN/OUT 2. 8	N.C.	CAN 2-L	N.C.

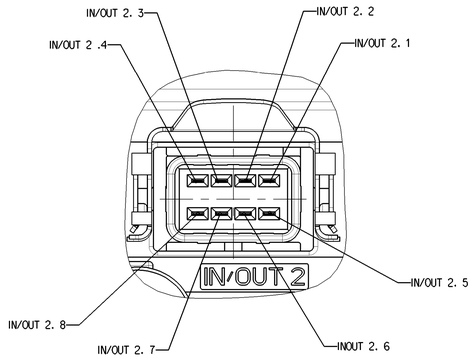

	X4:	MODULATOR MODULATOR MODULATEUR MODULATORE	
	480 102 010 0	480 102 014 0	480 102 015 0
MODULATOR.1	N.C.	PLUS SWITCH PORT 3 PLUS SCHALTAUSGANG 3 PLUS CONTACTEUR PILOTAGE 3 PLUS INTERRUTTORE COMANDO 3	PLUS SWITCH PORT 3 PLUS SCHALTAUSGANG 3 PLUS CONTACTEUR PILOTAGE 3 PLUS INTERRUTTORE COMANDO 3
MODULATOR.2	N.C.	GND ELECTROVALVE GND ELEKTROVENTIL GND ELECTROVALVE GND ELEKTRVALVOLA	GND ELECTROVALVE GND ELEKTROVENTIL GND ELECTROVALVE GND ELEKTRVALVOLA
MODULATOR.3	N.C.	AV (DISCHARGE VALVE) AV (AUSLASSVENTIL) AV (SOUPAPE D' ECHAPPEMENT AV (VALVOLA DI SCARICO)	AV (DISCHARGE VALVE) AV (AUSLASSVENTIL) AV (SOUPAPE D' ECHAPPEMENT AV (VALVOLA DI SCARICO)
MODULATOR.4	N.C.	PLUS BACK UP VALVE PLUS REDUNDANZVENTIL PLUS VALVE DE REDONDANCE PLUS VALVOLA RIDONDANZA	PLUS BACK UP VALVE PLUS REDUNDANZVENTIL PLUS VALVE DE REDONDANCE PLUS VALVOLA RIDONDANZA
MODULATOR.5	N.C.	BRAKE PRESSURE VALUE BREMSDRUCKWERT VALEUR PRESSION DE FREINAGE VALORE PRESSIONE DI FRENATURA	BRAKE PRESSURE VALUE BREMSDRUCKWERT VALEUR PRESSION DE FREINAGE VALORE PRESSIONE DI FRENATURA
MODULATOR.6	N.C.	GND EV-AV	GND EV-AV
MODULATOR.7	N.C.	EV (INLET VALVE) EV (EINLASSVENTIL) EV (SOUPAPE D' ADMISSION) EV (VALVOLA D' IMMISSIONE)	EV (INLET VALVE) EV (EINLASSVENTIL) EV (SOUPAPE D' ADMISSION) EV (VALVOLA D' IMMISSIONE)
MODULATOR.8	N.C.	GND BACK UP VALVE GND REDUNDANZVENTIL GND VALVA DE REDONDANCE GND VALVOLA RIDONDANZA	GND BACK UP VALVE GND REDUNDANZVENTIL GND VALVA DE REDONDANCE GND VALVOLA RIDONDANZA

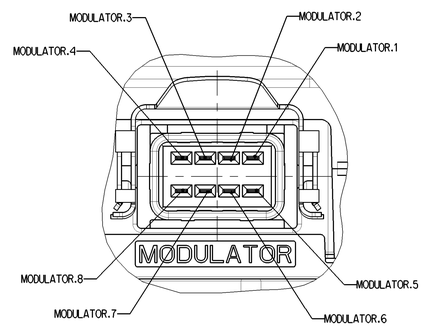

	X2:	DIAGNOSIS DIAGNOSE DIAGNOSTIC DIAGNOSI	
	480 102 010 0	480 102 014 0	480 102 015 0
DIAGN.1	K-LINE (ISO 14230)	K-LINE (ISO 14230)	K-LINE (ISO 14230)
DIAGN.2	PLUS SWITCH PORT 4 PLUS SCHALTAUSGANG 4 PLUS CONTACTEUR PILOTAGE 4 PLUS INTERRUTTORE COMANDO 4	PLUS SWITCH PORT 4 PLUS SCHALTAUSGANG 4 PLUS CONTACTEUR PILOTAGE 4 PLUS INTERRUTTORE COMANDO 4	PLUS SWITCH PORT 4 PLUS SCHALTAUSGANG 4 PLUS CONTACTEUR PILOTAGE 4 PLUS INTERRUTTORE COMANDO 4
DIAGN.3	GND ELECTROVALVE GND ELEKTROVENTIL GND ELECTROVALVE GND ELEKTRVALVOLA	GND ELECTROVALVE GND ELEKTROVENTIL GND ELECTROVALVE GND ELEKTRVALVOLA	GND ELECTROVALVE GND ELEKTROVENTIL GND ELECTROVALVE GND ELEKTRVALVOLA
DIAGN.4	PLUS SWITCH PORT 2 PLUS SCHALTAUSGANG 2 PLUS CONTACTEUR PILOTAGE 2 PLUS INTERRUTTORE COMANDO 2	PLUS SWITCH PORT 2 PLUS SCHALTAUSGANG 2 PLUS CONTACTEUR PILOTAGE 2 PLUS INTERRUTTORE COMANDO 2	N.C.
DIAGN.5	24 N INPUT 24 N EINGANG 24 N ENTREE 24 N ENTRATA	24 N INPUT 24 N EINGANG 24 N ENTREE 24 N ENTRATA	N.C.
DIAGN.6	N.C.	BATTERY CHARGING OUTPUT BATTERIE LADEAUSGANG SORTIE DE CHARGE BATTERIE USCITA CARICA BATTERIA	N.C.
DIAGN.7	GND ELECTROVALVE GND ELEKTROVENTIL GND ELECTROVALVE GND ELEKTRVALVOLA	GND ELECTROVALVE GND ELEKTROVENTIL GND ELECTROVALVE GND ELEKTRVALVOLA	GND ELECTROVALVE GND ELEKTROVENTIL GND ELECTROVALVE GND ELEKTRVALVOLA
DIAGN.8	PLUS SWITCH PORT 1 PLUS SCHALTAUSGANG 1 PLUS CONTACTEUR PILOTAGE 1 PLUS INTERRUTTORE COMANDO 1	PLUS SWITCH PORT 1 PLUS SCHALTAUSGANG 1 PLUS CONTACTEUR PILOTAGE 1 PLUS INTERRUTTORE COMANDO 1	N.C.

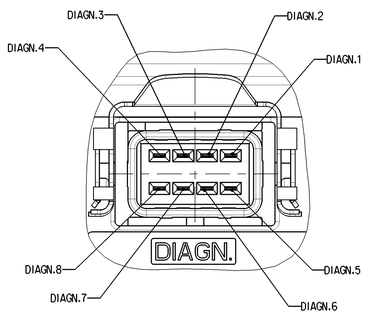

	X1:	POWER SUPPLY VERSORGUNG ALIMENTATION ALIMENTAZIONE	
	480 102 010 0	480 102 014 0	480 102 015 0
POWER.1	CAN-L (ISO 11992) (24V)	CAN-L (ISO 11992) (24V)	CAN-L (ISO 11992) (5V)
POWER.2	CAN-H (ISO 11992) (24V)	CAN-H (ISO 11992) (24V)	CAN-H (ISO 11992) (5V)
POWER.3	WARNING LAMP WARNLAMPE LAMPE TEMOIN LUCE SPIA	WARNING LAMP WARNLAMPE LAMPE TEMOIN LUCE SPIA	N.C.
POWER.4	GND ELECTRONIC GND ELEKTRONIK GND ELECTRONIQUE GND ELETRONICA	GND ELECTRONIC GND ELEKTRONIK GND ELECTRONIQUE GND ELETRONICA	N.C.
POWER.5	GND ELECTROVALVE GND ELEKTROVENTIL GND ELECTROVALVE GND ELETROVALVOLA	GND ELECTROVALVE GND ELEKTROVENTIL GND ELECTROVALVE GND ELETROVALVOLA	GND
POWER.6	PLUS ELEKTRONIC PLUS ELEKTRONIK PLUS ELECTRONIQUE PLUS ELETRONICA	PLUS ELEKTRONIC PLUS ELEKTRONIK PLUS ELECTRONIQUE PLUS ELETRONICA	N.C.
POWER.7	PLUS ELECTROVALVE PLUS ELEKTROVENTIL PLUS ELECTROVALVE PLUS ELETTROVALVOLA	PLUS ELECTROVALVE PLUS ELEKTROVENTIL PLUS ELECTROVALVE PLUS ELETTROVALVOLA	PLUS

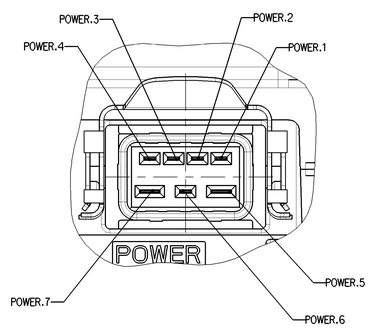

	PORT PORT	ANSCHLUSS ATTACCO	FUNCTION FUNCTION FUNCTION FUNCTION		
			480 102 010 0	480 102 014 0	480 102 015 0
	1	1	SUPPLY, ENERGIEZUFLUSS VOM VORRAT, ALIMENTATION, ALIMENTAZIONE		
	2.1 2.1 2.1 2.1	2.2 2.2 2.2	DELIVERY ENERGIEABFLUSS UTILISATION MANDATA		
	3.1	3.2	EXHAUST, ANSCHLUSS ATMOSPHAERE, ECHAPPEMENT, SCARICO		
	4	4	CONTROL PORT, STEUERANSCHLUSS, ORIFICE DE COMMANDE, ORIFIZIO DI COMANDO		
	5	5	AIR-SUSPENSION BELLOWS, LUFTFEDERBALG, COUSSIN DE SUSPENSION PNEUMATIQUE, SOFFIETTO A SOSPENSIONE PNEUMATICA		
MAIN AXLE HAUPTACHSE ESSIEU PRINCIPAL ASSE PRINCIPALE	d	c	X7, X8:	WHEEL SPEED SENSOR RADDREHZAHLSENSOR CAPTEUR DI VITESSE DE ROUE SENSORE DI VELOCITA ROUTA	
	d.1	c.1		SENSOR IG	
	d.2	c.2		SENSOR IGM,MM	
STEERING/LIFTING AXLE LENK-/LIFTACHSE ESSIEU DIRECTEUR/ LEVABLE ASSE STERZANTE/ SOLLEVATORE	f	e	X9, X10:	WHEEL SPEED SENSOR RADDREHZAHLSENSOR CAPTEUR DIE VITESSE DE ROUE SENSORE DI VELOCITA ROUTA	
	f.1	e.1		SENSOR IG	
	f.2	e.2		SENSOR IGM	
MAIN AXLE HAUPTACHSE ESSIEU PRINCIPAL ASSE PRINCIPALE	1		X5:	IN/OUT 1 EINGANG/AUSGANG 1 ENTREE/SORTIE 1 ENTRATA/USCITA 1	
	1.1			PLUS SWITCH PORT 5 PLUS SCHALTAUSGANG 5 PLUS CONTACTEUR PILOTAGE 5 PLUS INTERRUTTORE COMANDO 5	PLUS SWITCH PORT 5 PLUS SCHALTAUSGANG 5 PLUS CONTACTEUR PILOTAGE 5 PLUS INTERRUTTORE COMANDO 5	PLUS SWITCH PORT 5 PLUS SCHALTAUSGANG 5 PLUS CONTACTEUR PILOTAGE 5 PLUS INTERRUTTORE COMANDO 5
	1.2			GND ELECTROVALVE GND ELEKTROVENTIL GND ELECTROVALVE GND ELEKTRVALVOLA	GND ELECTROVALVE GND ELEKTROVENTIL GND ELECTROVALVE GND ELEKTRVALVOLA	GND ELECTROVALVE GND ELEKTROVENTIL GND ELECTROVALVE GND ELEKTRVALVOLA
	1.3			MULTI_FUNCTION INPUT MULTIFUNKTIONSEINGANG ENTREE MULTI-FONCTION INGRESSO MULTI-FUNZIONE	MULTI_FUNCTION INPUT MULTIFUNKTIONSEINGANG ENTREE MULTI-FONCTION INGRESSO MULTI-FUNZIONE	MULTI_FUNCTION INPUT MULTIFUNKTIONSEINGANG ENTREE MULTI-FONCTION INGRESSO MULTI-FUNZIONE
		2	X6:	LINING WEAR SENSOR VERSCHLEISSSENSOR CAPTEUR D' USURE DES GARNITURES SENSORI USURA DELLE GUARNIZIONI		
		2.1		PLUS LINING WEAR SENSOR PLUS VERSCHLEISSSENSOR PLUS CAPTEUR D' USURE (DES GARNITURES) PLUS SENSORE USURA (DELLE GUARNIZIONI)	PLUS LINING WEAR SENSOR PLUS VERSCHLEISSSENSOR PLUS CAPTEUR D' USURE (DES GARNITURES) PLUS SENSORE USURA (DELLE GUARNIZIONI)	N.C.
		2.2		GND LINING WEAR SENSOR GND VERSCHLEISSSENSOR GND CAPTEUR DE USURE (DES GARNITURES) GND SENSORE USURA (DELLE GUARNIZIONI)	GND LINING WEAR SENSOR GND VERSCHLEISSSENSOR GND CAPTEUR DE USURE (DES GARNITURES) GND SENSORE USURA (DELLE GUARNIZIONI)	N.C.
		2.3		LINING WEAR SENSOR VALUE VERSCHLEISSSENSORWERT VELEUR DE CAPTEUR D' USURE DES GARNITURES VALORE DI SENSORI DI USURE DELLE GUARNIZIONI	LINING WEAR SENSOR VALUE VERSCHLEISSSENSORWERT VELEUR DE CAPTEUR D' USURE DES GARNITURES VALORE DI SENSORI DI USURE DELLE GUARNIZIONI	N.C.

ON EACH SIDE OF THE TRAILER, THE BRAKE CYLINDERS AND SENSORS SHALL BE CONNECTED EXCLUSIVELY TO THAT MODULATOR SIDE WHICH POINTS TOWARD THE SAME SIDE OF THE TRAILER
(SEE SHEET 2)
*** BREMZCYLINDER UND SENSOREN DER JEWEILIGEN ANHAENGERSEITE SIND AUSSCHLIESSLICH MIT DER ZUGEWANDTEN MODULATORSEITE ZU VERBINDEN
(SIEHE BLATT 2)
SUR CHAQUE COTE DU REMORQUE, LES CYLINDRES DE FREIN ET LES CAPTEURS DOIVENT ETRE RELIES AVEC LE MEME COTE DU MODULATEUR SEULEMENT
(VOIR FEUILLE 2)
SU CIASCUN LATO DEL RIMORCHIO, I CILINDI DI FRENO ED I SENSORI DEVONO ESSERE COLLEGATI ALLO STESSO LATO DEL MODULATORE
(VEDERE FOGLIO 2)

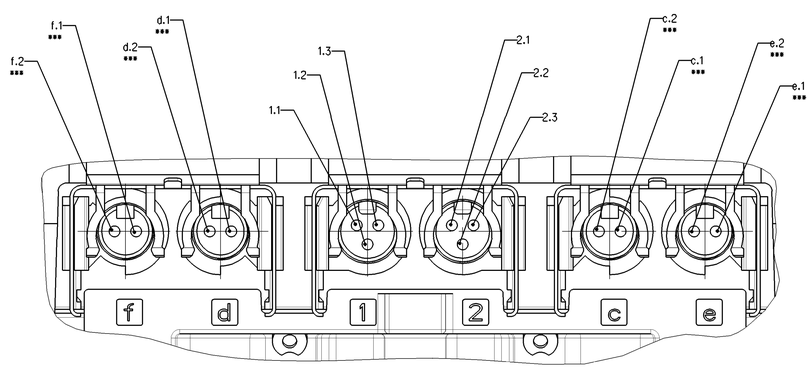

110621	0d	2006-10-06	
061028	5c	2004-11-08	
080103	0d	2003-02-25	
DCN-No.	Rev.	Date	
State of Revision			

General Specification:	JED-334-0		
Further Technical Data:			
Doc. Code:		Sheet:	To
General Tolerances JED-261			
Class 1)	Range of Nominal Dimensions (± mm) ≤ 50	> 50 ≤ 180	> 180 ≤ 400	> 400
Fine	0.5	1.0	1.5	2.0
Medium	1.0	2.0	3.0	4.0
Coarse	2.0	3.5	5.0	6.5
Tapped Holes acc.				
1) Tolerance Class Applied Crosmarked				

Copyright WABCO *

Date	Signature	
Drawn		
2002-03-22	Kaufmann	
Checked		
2002-03-22		
Expert		
Frank		

Mass	Scale	Material No.	WABCO id. No.: 480 102 019 0
3,9 kg	2:1	480 102 019 0	

Size	Tab	Function Code	CAD-System	Proj-Type	Replacement for
A 0	540		Pro/E	02 X	480 102 000 0,605

WABCO

EBS-Trailer Modulator
EBS-Anhaengermodulator
EBS de la Remorque Modulateur
EBS del Rimorchio Modulatore

Doc.Code	Language	Sheet
653	en/de fr/it	2/3

100mm