MATERIAL AND SURFACE PROTECTION MATERIAL UND OBERFLAECHENSCHUTZ		MATERIAU ET PROTECTION SUPERFICIELLE MATERIALE E PROTEZIONE SUPERFICIALE		ZGS	Ⓗ CAD	CUSTOMER NO. KUNDEN-NR. NO CLIENT k.Z. NO CLIENTE	DEVICE NUMBER GERAETE-NUMMER NUMERO D' APPAREIL NUMERO CODICE DELL APPARECCHIO	PORT ANSCHLUSS Ⓐ ORIFICE ORIFIZIO						APPLICATION ANWENDUNGSBEREICH APPLICATION APPLICAZIONE
								1	2.1	2.2	41	42	43	6	
I	Al JED-029 M1/C JED-259	VII	Al JED-077.1 / JED-007.1												
II	X46 Cr13 JED-642	VIII	Fe JED-021 M3/Zn/C JED-256												
III	Fe JED-051 M4/Zn/C JED-256	IX	Ⓐ PA 6.6 JED-559				480 205 001 0 (884 009 856 0)	X	X	/	X	X	X	X	4-KANAL-SYSTEM
IV	Ⓐ JED-570.616	X	JED-020.1 / JED-256				480 205 002 0 (884 009 353 0)	X	X	X	X	X	X	X	6-KANAL-SYSTEM
V	Ⓕ														
VI	NBR JED-235														

THE VALVE CORRESPONDS TO THE REGULATIONS FOR ELECTROMAGNETIC DEVICES ACCORDING TO VDE 0580
GERAET ENTSPRICHT DEN BESTIMMUNGEN FUER ELEKTROMAGNETISCHE GERAETE NACH VDE 0580
LA VALVE CORRESPOND AUX CONDITIONS POUR DES APPAREILS ELECTROMAGNETIQUES SUIVANT VDE 0580
LA VALVOLA CORRISPONDE ALLE CONDIZIONI PER APPARECCHI ELETTROMAGNETICI SECONDO VDE 0580

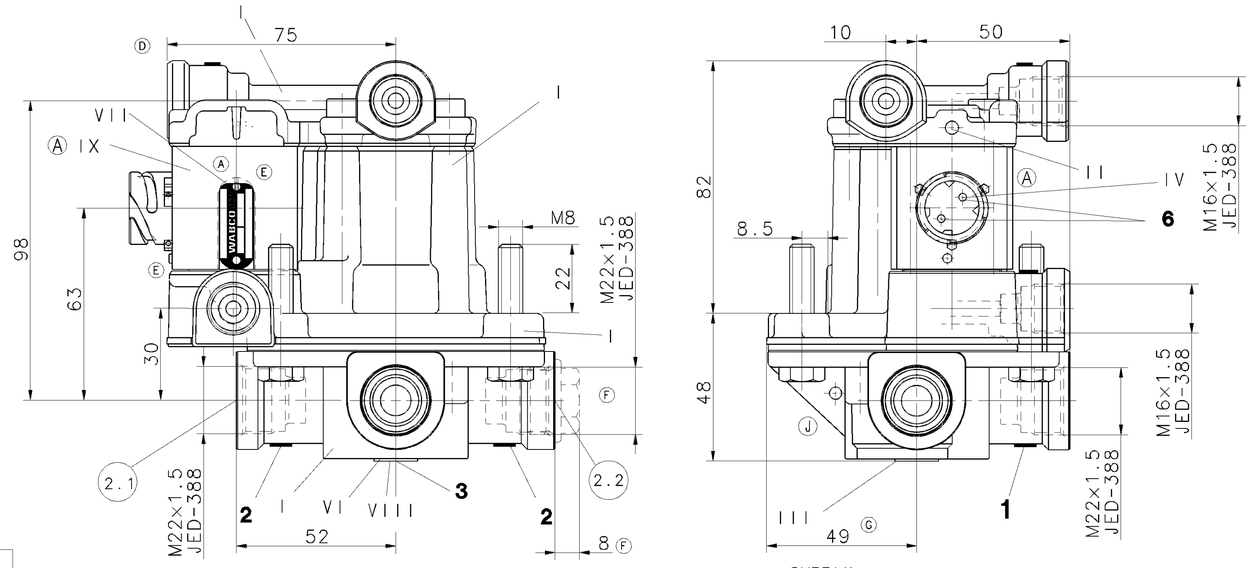

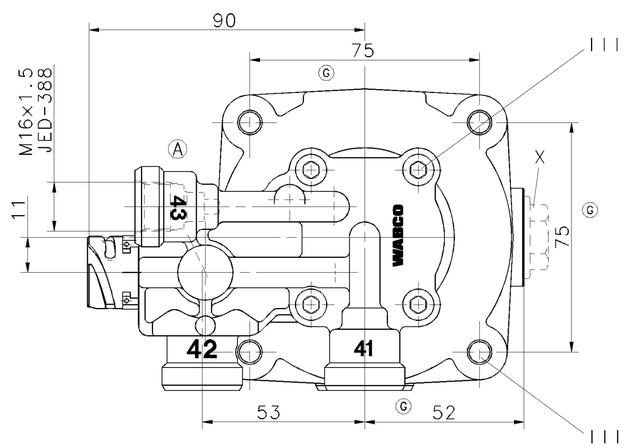

1	SUPPLY VORRAT ALIMENTATION ALIMENTAZIONE
2	DELIVERY OF ENERGY ENERGIEABFLUSS UTILISATION MANDATA
3	EXHAUST ENTLUEFTUNG ECHAPPEMENT SCARICO
41 Ⓐ 42 43	CONTROL STEUERANSCHLUSS COMMANDE COMMANDO
6	ELECTRICAL CONTROL (MAGNET) ELEKTRISCHER STEUERANSCHLUSS (MAGNET) COMMANDE ELECTRIQUE (AIMANT) COMMANDO ELECTRICO (MAGNETE)

WORKING MEDIUM : AIR (WATER-, OIL AND ALCOHOL CONTAINING)
ARBEITSMEDIUM : LUFT (WASSER-, OEL UND ALKOHOLHALTIG)
FLUIDE D'UTILISATION : AIR (CHARGE D'EAU, D'HUILE ET D'ALCOOL)
FLUIDO DI ESERCIZIO : ARIA (CONTENENTE ACQUA, OLIO ED ALCOOL)

WORKING ENVIRONMENT : AIR (CONTAINING WATER, SALT, DUST AND OIL)
UMGEBUNGSMEDIUM : LUFT (WASSER-, SALZ-, STAUB- UND OELHALTIG)
FLUIDE AMBIANTE : AIR (CHARGE D'EAU, DE SEL, DE POUSSIERE ET D'HUILE)
FLUIDO AMBIENTE : ARIA (CONTENENTE ACQUA, SALE, POLVERE ED OLIO)

THERMAL RANGE OF APPLICATION UNDER NORMAL AMBIANT CONDITIONS :
THERMISCHER ANWENDUNGSBEREICH UNTER NORMALEN UMGEBUNGSBEDINGUNGEN : -40°...+80°C
PLAGE DE TEMPERATURE EN UTILISATION CONTINUE DE :
CAMPO D'APPLICAZIONE TERMICA NELLE NORMALI CONDIZIONI AMBIENTALI :

SHORT TERM RESISTANCE TO HEAT :
KURZZEITIGE WAERMEBESTAENDIGKEIT : +110°C
RESISTANCE A LA CHALEUR A COURTE DUREE : (p_1= 0 bar, max. 1h)
RESISTENZA AL CALORE SOLO PER BREVE TEMPO :

WORKING PRESSURE :
BETRIEBSDRUCK :
PRESSION DE SERVICE : MAX.p_e 10.2 bar
PRESSIONE D'ESERCIZIO :

SUPPLY PRESSURE :
VORRATSDRUCK : MAX.p_e 13 bar
PRESSION D'ALIMETATION :
PRESSIONE DI ALIMENTAZONE :

SOCKET :
GERAETESTECKDOSE :
PRISE DE COURANT : DIN 72585 1A 2.1-SN / K2
PRESA DI CORRENTE :

VOLTAGE :
SPANNUNG : 14,5 ... 30,5 V
TENSION :
TENSIONE :

TYPE OF CURRENT : DIRECT CURRENT
STROMART : GLEICHSTROM
NATURE DU COURANT : COURANT CONTINU
NATURA DELLA CORRENTE : CORRENTE CONTINUA

SERVICE CONDITION : INTERMITTENT SERVICE
BETRIEBSART : AUSSETZBETRIEB ED=10%
CONDITION DU SERVICE : SERVICE INTERMITTENT
CONDIZIONE DI SERVIZIO : UTILIZZO INTERMITTENTE

DEGREE OF PROTECTION ACC.IEC 529 :
SCHUTZART NACH EN 60529; IEC 529 : COMPLETE DEVICE
DEGRE DE PROTECTION SUIVANT IEC 529 : KOMPLETTES GERAET IP 66, IP 69K
GRADO DI PROTEZIONE SECONDO IEC 529 : APPAREIL COMPLET
APPARECCHIO COMPLETO

ELEKTRIC TERMINALS WITH MOUNTED COUPLING
ELEKTRISCHE ANSCHLUESSE MIT MONTIERTER KUPPLUNG IP 67
BORNES ELECTRIQUES AVEC L' ACCOUPLEMENT MONTE
TERMINALI ELETTRICI CON ACCOPPIAMENTO MONTATO

PROTECTION CLASS :
SCHUTZKLASSE : III
CLASSE DE PROTECTION :
CLASSE DI PROTEZIONE :

PERMISSIBLE INSTALLATION :
ZULAESSIGE EINBAULAGE : ±45°
POSITION D'INSTALLATION ADMISE :
POSIZIONE DI MONTAGGIO AMMESSA :

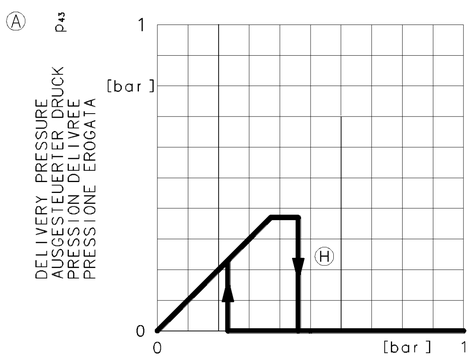

CONTROL PRESSURE
STEUERDRUCK
PRESSION DE COMMANDE
PRESSIONE DI COMANDO
p_{42}, p_{41} (p_{42}=p_{41})

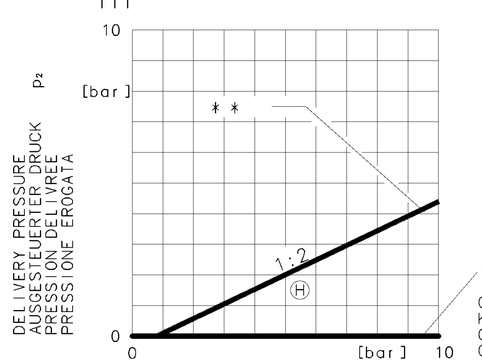

CONTROL PRESSURE
STEUERDRUCK
PRESSION DE COMMANDE
PRESSIONE DI COMANDO
p_{41}

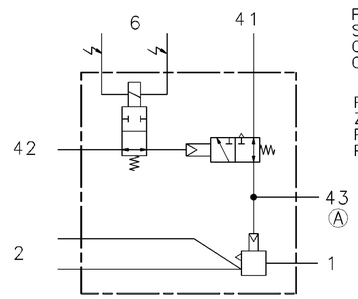

CHARACTERISTIC : * = p_{42} > 0.2 bar
KENNLINIE :
COURBE CHARACTERISTIQUE :
CURVA CARATTERISTICA : * * = p_{42} < 0.6 bar

TORQUE FOR CONNECTIONS :
ANZUGSMOMENT FUER EINSCHRAUBSTUTZEN : M16×1.5:$M_{max.}$= 34 Nm
COUPLE DE SERRAGE DES RACCORDS : M22×1.5:$M_{max.}$= 53 Nm
COPPIA DI SERRAGGIO DEI RACCORDI :

GENERAL SPECIFICATION: JED-334											
FURTHER TECHNICAL DATA:											
DOC. CODE:			SHEET: TO								
GENERAL TOLERANCES											
CLASS 1)	RANGE OF NOMINAL DIMENSIONS (± mm)										
		≤50	> 50 ≤180	>180 ≤400	>400						
FINE		0,5	1,0	1,5	2,0						
MEDIUM	X	1,0	2,0	3,0	4,0	± 3°					
COARSE		2,0	3,5	5,0	6,5						
TAPPED HOLES ACC. ISO 4039 / JED-152											
1) TOLERANCE CLASS APPLIED CROSSMARKED											

DCN-NO.	REV.	DATE
078648	1×J	02-02-26
075483	3×H	01-02-21
071912	4×G	99-08-24
063840	3×F	97-11-17
062246	2×E	97-02-20
061411	2×D	96-06-26
058154	1×C	95-09-18
058118	1×B	95-07-05
057077	9×A	95-04-20

CADAM-DRAWING COPYRIGHT

DATE	SIGNATURE	
95-02-14	DRAWN: DREYER	
95-02-14	CHECKED: DEIKE/KIEL	
95-02-14	STANDARDIZATION: PANTZER	

WABCO

3/2 RELAY VALVE
3/2 RELAISVENTIL
3/2 VALVE RELAIS
3/2 VALVOLA RELE

MASS	SCALE	PRODUCT IDENTIFICATION NO.	DOC. CODE	SHEET
1.35 kg	1:1	480 205 000 0	653	1/1
SIZE A 1	I.R.I. 140		SHAPE CODE	REPLACEMENT FOR

100mm EXPERT CODE 9 0 6 PRODUCT TYPE 0 2 X

TOUTE COMMUNICATION OU REPRODUCTION DE CE DOCUMENT, TOUTE EXPLOITATION OU COMMUNICATION DE SON CONTENU NE SONT PAS AUTORISES SAUF AUTORISATION ECRITE. TOUS DROITS DE PROPRIETE LIES A LA PRESENTE DOCUMENTATION TECHNIQUE, LA MARQUE WABCO ET LA MARQUE DE FORME WABCO SONT DES MARQUES DEPOSEES DE WABCO. NON E' PERMESSO CONSEGNARE A TERZI O RIPRODURRE QUESTO DOCUMENTO, NE UTILIZZARNE IL CONTENUTO O RENDERLO COMUNQUE ACCESSIBILE A TERZI. TUTTI I DIRITTI DI PROPRIETA' RELATIVI ALLA PRESENTE DOCUMENTAZIONE TECNICA, IL MARCHIO WABCO E LA MARCA DI FORMA WABCO SONO MARCHI DEPOSITATI DI WABCO. NO PUEDE SER REPRODUCIDO, DAR A TERCEROS O UTILIZARSE SIN PERMISO ESCRITO. TODOS LOS DERECHOS DE PROPIEDAD INTELECTUAL RELATIVOS A ESTA DOCUMENTACION TECNICA, LA MARCA WABCO Y LA MARCA DE FORMA WABCO SON MARCAS REGISTRADAS DE WABCO. NEM É PERMITIDO CONFIAR A TERCEIROS OU REPRODUZIR ESTE DOCUMENTO, UTILIZAR O SEU CONTEÚDO OU DISPONIBILIZÁ-LO A TERCEIROS. TODOS OS DIREITOS DE PROPRIEDADE INTELECTUAL RELATIVOS A ESTA DOCUMENTAÇÃO TÉCNICA, A MARCA WABCO E A MARCA DE FORMA WABCO SÃO MARCAS REGISTADAS DA WABCO. THIS DOCUMENT MAY NOT BE REPRODUCED OR GIVEN TO THIRD PARTIES OR ITS CONTENTS MADE ACCESSIBLE TO THIRD PARTIES WITHOUT WRITTEN PERMISSION. ALL RIGHTS, INCLUDING THOSE RELATING TO THE USE OF THIS DOCUMENT OR THE COMMUNICATION OF ITS CONTENTS, ARE RESERVED. THE WABCO TRADEMARK AND THE WABCO SHAPE MARK ARE REGISTERED TRADEMARKS OF WABCO. THE CONTENTS OF THIS DOCUMENT MAY NOT BE COPIED OR DISCLOSED TO THIRD PARTIES WITHOUT WRITTEN PERMISSION. ALL RIGHTS, INCLUDING THOSE RELATING TO THE USE OF THIS DOCUMENT OR THE COMMUNICATION OF ITS CONTENTS, ARE RESERVED. THE WABCO TRADEMARK AND THE WABCO SHAPE MARK ARE REGISTERED TRADEMARKS OF WABCO. DOCUMENT IS THE SUBJECT OF COPYRIGHT, PATENT OR REGISTRATION OF A UTILITY MODEL OR DESIGN. THIS DOCUMENT IS THE SUBJECT OF COPYRIGHT.

1209/016/3/04.93
655/1653