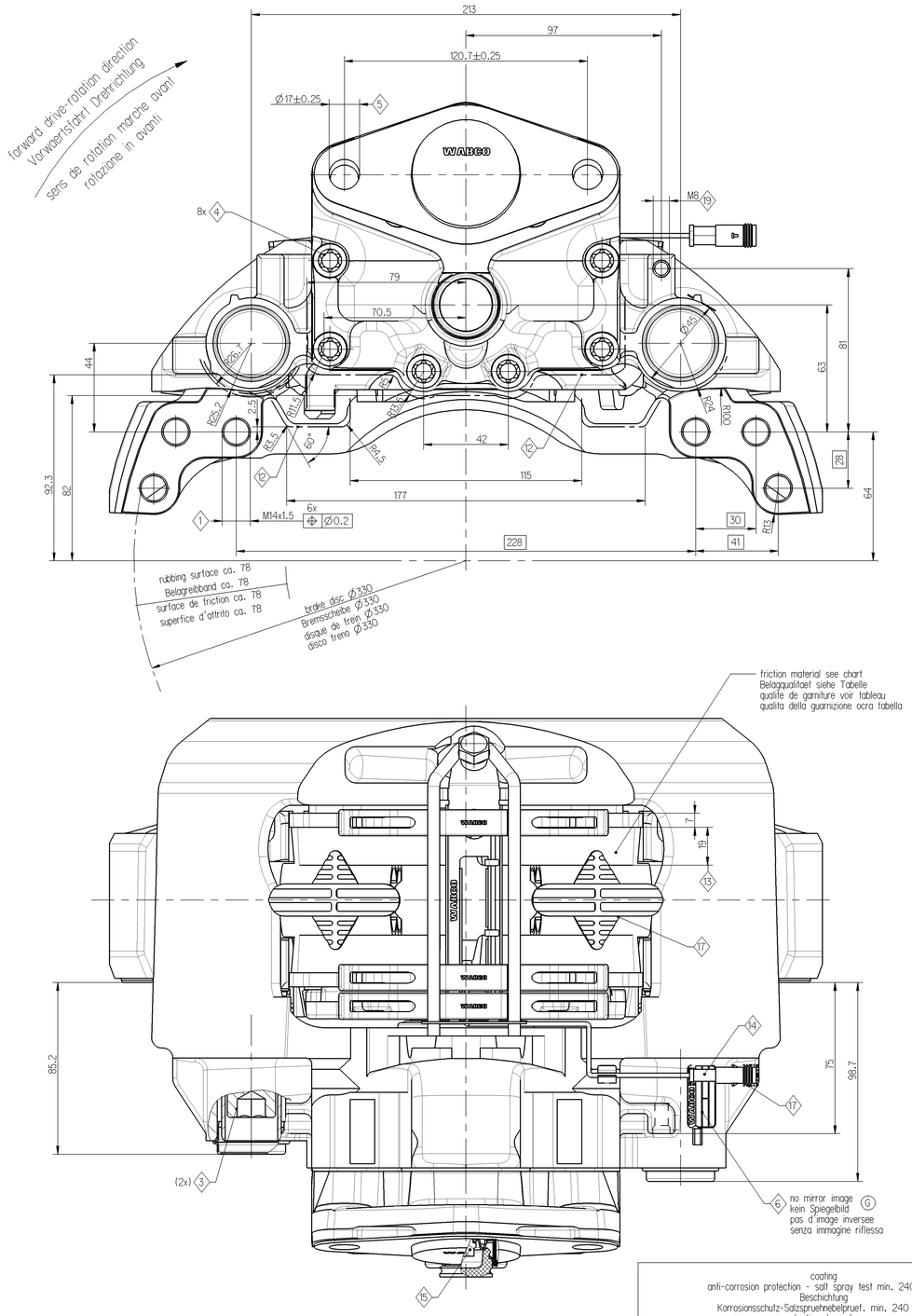

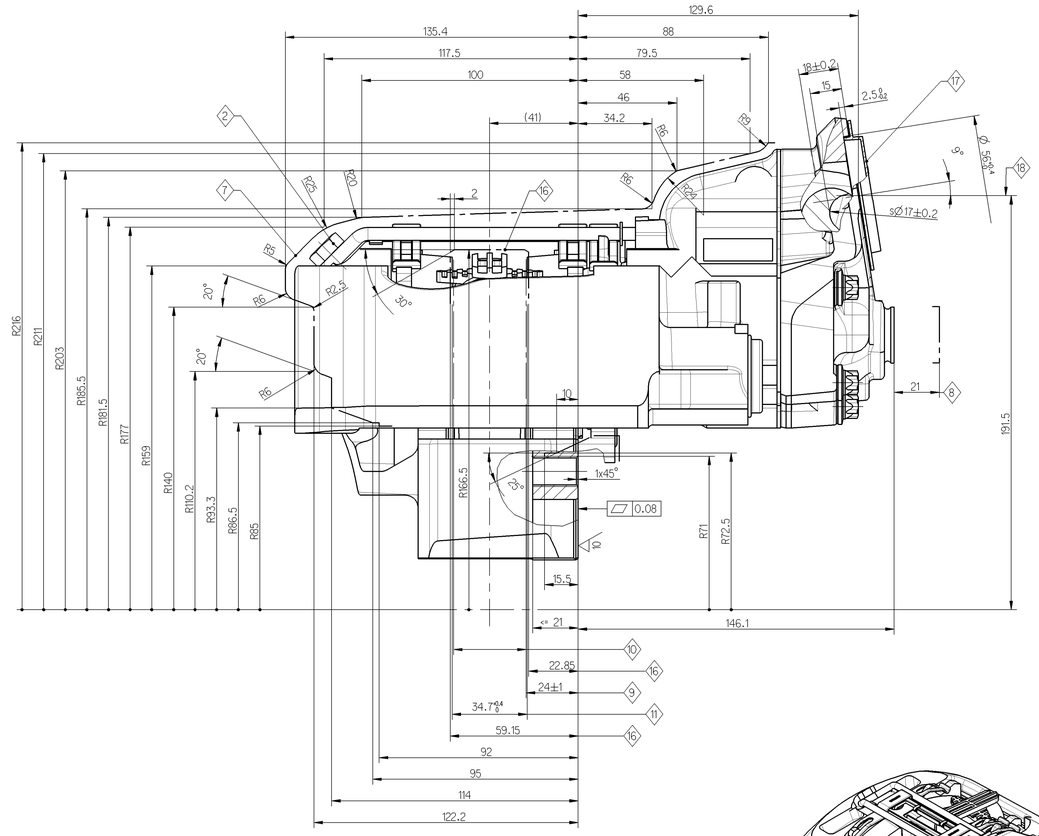

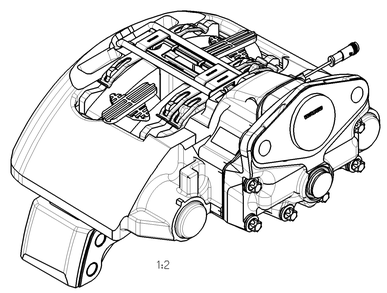

	tightening torque Anziehdrehmoment couple de serrage coppia di serraggio	width over flats SW surplats misura chiave	note Bemerkung remarque annotazione			
1	180 ± 20 Nm	22 21	DIN 961 ISO 8676	brake mounting hexagon screw, oiled M14 x 1.5 x ... - 10.9	Bremsenbefestigung Sechskantschraube, geoelt M14 x 1.5 x ... - 10.9	fixation du frein vis a tete hexagonale, huilee M14 x 1.5 x ... - 10.9	fissaggio freno vite a testa esagonale, oliate M14 x 1.5 x ... - 10.9
2	20 ± 2 Nm	17		pad hold down device M10	Buegelbefestigung M10	barrette de maintien M10	dispositivo fissaggio M10
3	340 ± 20 Nm	14		tightening order 1. long bolt DIN 912-M16x1.5x90-12.9 2. short bolt DIN 912-M16x1.5x70-12.9	Anziehreihenfolge 1. Bolzen lang DIN 912-M16x1.5x90-12.9 2. Bolzen kurz DIN 912-M16x1.5x70-12.9	ordre de serrage 1. axe long DIN 912-M16x1.5x90-12.9 2. axe court DIN 912-M16x1.5x70-12.9	sequenza di serraggio 1. viti lunghe DIN 912-M16x1.5x90-12.9 2. viti corte DIN 912-M16x1.5x70-12.9
G 4	68 ± 5 Nm	E 12		cover fixing DIN 34800 - M10x1x40 - 12.9	Deckelbefestigung DIN 34800 - M10x1x40 - 12.9	fixation couvercle DIN 34800 - M10x1x40 - 12.9	fissaggio coperchio DIN 34800 - M10x1x40 - 12.9
5	210 -30 Nm	24		operation cylinder M16x1.5	Betaetigungszylinder M16x1.5	actionneur M16x1.5	cilindro operatore M16x1.5

6 product identification WABCO
Kennzeichnung WABCO
identification WABCO
identificazione prodotto WABCO

7 max. rotary outline
maximale Rotationskontur
profil enveloppe maximal
rotazione profilo massimo

8 max. displacement
maximale Verschiebung
deplacement maximal
max. movimento

9 fitting dimension of the disc
Scheibeneinbaumass
dimension de montage du disque
quota fissaggio disco

10 brake disc new 34-0.2, max. wearable up to 28
Bremsscheibe neu 34-0.2, verschleissbar bis 28
disque neuf 34-0.2, a user jusqu'a 28
disco freno nuovo 34-0.2, usurabile fino 28

11 assembly dimension for brake pads
Einbaumass fuer Bremsbeleage
dimension de montage des garnitures
dimensione assemblaggio pastiglie freno

12 envelope circle caliper with cover
Huellkurve Bremssattel mit Deckel
enveloppante etrier avec couvercle
incombro pinza con coperchio

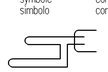

13 remaining lining thickness 2
Restbelagstaerke 2
epaisseur garniture restante 2
spessore residuo pastiglia 2

14 wear indicator
Verschleissanzeige
indicateur d'usure
indicatore d'usura

symbol Symbol symbole simbolo	connection Anschluss connexion connessione
	socket contact Ø1 Buchsenkontakt Ø1 prise de courant contact Ø1 presa di corrente contatto Ø1

15 hexagon width over flats 8
Sechskant SW 8
tete hexagonale (surplats 8)
esagono SW 8

16 maximum disc clearance
Scheibenfreigang
course libre du disque
max. dimensione installazione disco

17 for storage and shipment
fuer Transport und Lagerung
pour transport et stockage
per stoccaggio e trasporto

18 center line cylinder
Mitte Zylinder
axe median actionneur
centro cilindro

19 wear indicator fastening
Verschleissanzeigebefestigung
fixation de l'indicateur d'usure
fissaggio indicatore d'usura

coating anti-corrosion protection - salt spray test min. 240 hours Beschichtung Korrosionsschutz-Salzsprueheberpruef. min. 240 Std. protection de surface tenue BS 240 h min. rivestimento protezione contro la corrosione - prova di resistenza alla nebbia salina dopo almeno 240 h	
brake caliper Bremssattel etrier de frein pinza freno	electric dip coated (KTL) elektrotauchlackiert (KTL) trempage electro-phoretique (KTL) elettroverniciatura ad immersione
brake carrier Bremsentraeger support d'etrier supporto freno	
cover Deckel couvercle coperchio	zinc-iron coated gal. Zink-Eisen-beschichtet protection Zn/Fe zincatura

characteristic data sheet Kenndatenblatt feuillet des caracteristiques foglio dati caratteristici	see chart siehe Tabelle voir tableau ocra tabella

Produkt-Spezifikation 640 175 001 0
product-specification 640 175 001 0

40 175 081 (640 175 081 0)	81.50804.6354	FER 4568	640 175 049 0 Bl. 3	mirror image Spiegelbild image inversee immagine riflessa
40 175 080 (640 175 080 0)	81.50804.6355			as shown wie gezeichnet comme dessine come disegnato
40 175 052 (640 175 052 0)	81.50804.6090	Textar T 3010 (3AX)	640 175 051 0	mirror image Spiegelbild image inversee immagine riflessa
40 175 051 (640 175 051 0)	81.50804.6089			as shown wie gezeichnet comme dessine come disegnato
ident-no brake Mat.-Nr. Bremse reference frein codice materiale freno	customer no. Kundennummer no. du client no. cliente	friction material Belagqualitaet qualite de garniture qualita della guarnizione	characteristic data sheet Kenndatenblatt feuillet des caracteristiques foglio dati caratteristici	brake type Ausfuehrung Bremse variante de frein versione freno

PAN 17

192331	H	2007-02-20
062399	G	2006-03-07
DCN-No.	Rev.	Date

State of Revision

General Specification:	JED-334-0
Further Technical Data:	
Doc. Code:	Sheet: To

General Tolerances JED-261

	Range of Nominal Dimensions (± mm)				
Class 1)	≤ 50	> 50 ≤ 180	> 180 ≤ 400	> 400	∢
Fine	0.5	1.0	1.5	2.0	±1°
Medium	1.0	2.0	3.0	4.0	
Coarse	2.0	3.5	5.0	6.5	

Tapped Holes acc.

1) Tolerance Class Applied Crossmarked

dimensions without tolerances are gauge dimensions
nicht tolerierte Masse = Lehrenmasse
dimensions non tolerances = calibres
le dimensioni senza tolleranza sono quelle riportate al calibro

Copyright WABCO

Date	Signature
Drawn 2002-11-12	Back
Checked 2003-01-17	Redemann
Expert Redemann	

WABCO

Disc brake PAN-range light
Scheibenbremse PAN-Reihe leicht
Frein a disque PAN-type gamme basse
Pinza freno a disco tipo PAN leggero

Mass 23.735 kg	Scale 1:1	Material No.	WABCO Id. No.= 640175051	Doc.-code	Language	Sheet
Size A 0	Title 520	40 175 051		653	en/de fr/it	1/1
		Function Code	CAD System Pro/E	Prod.-Type 0 1 X	Replacement for	

100mm