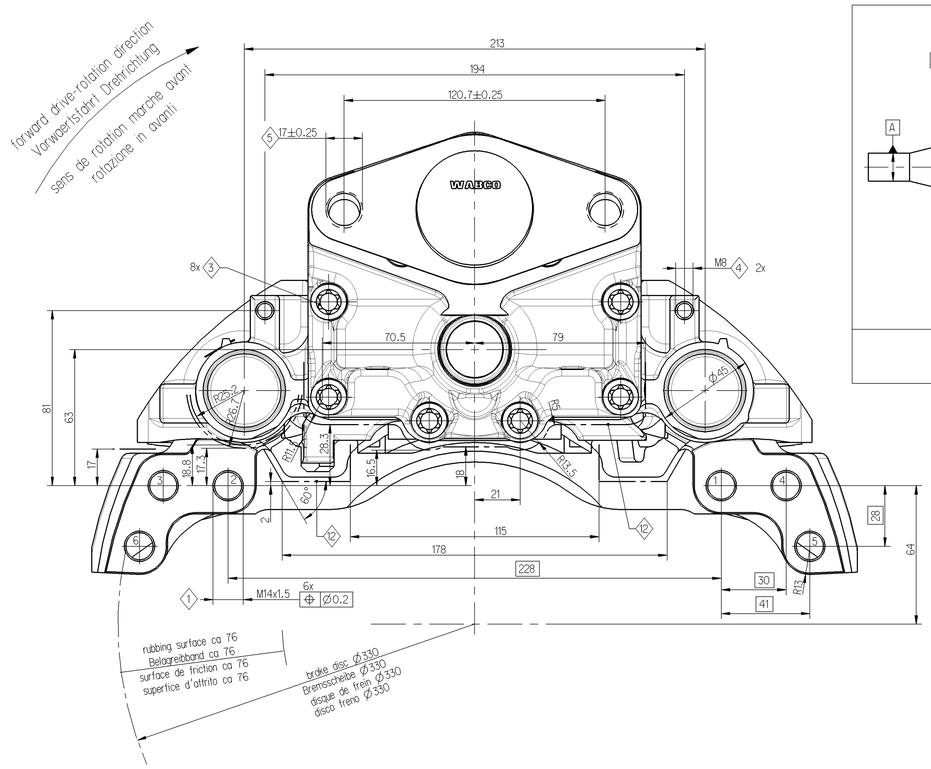

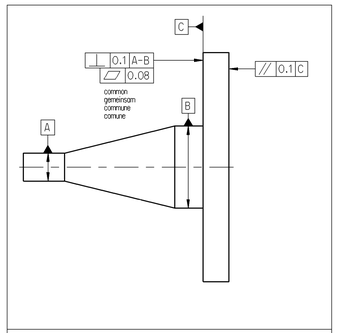

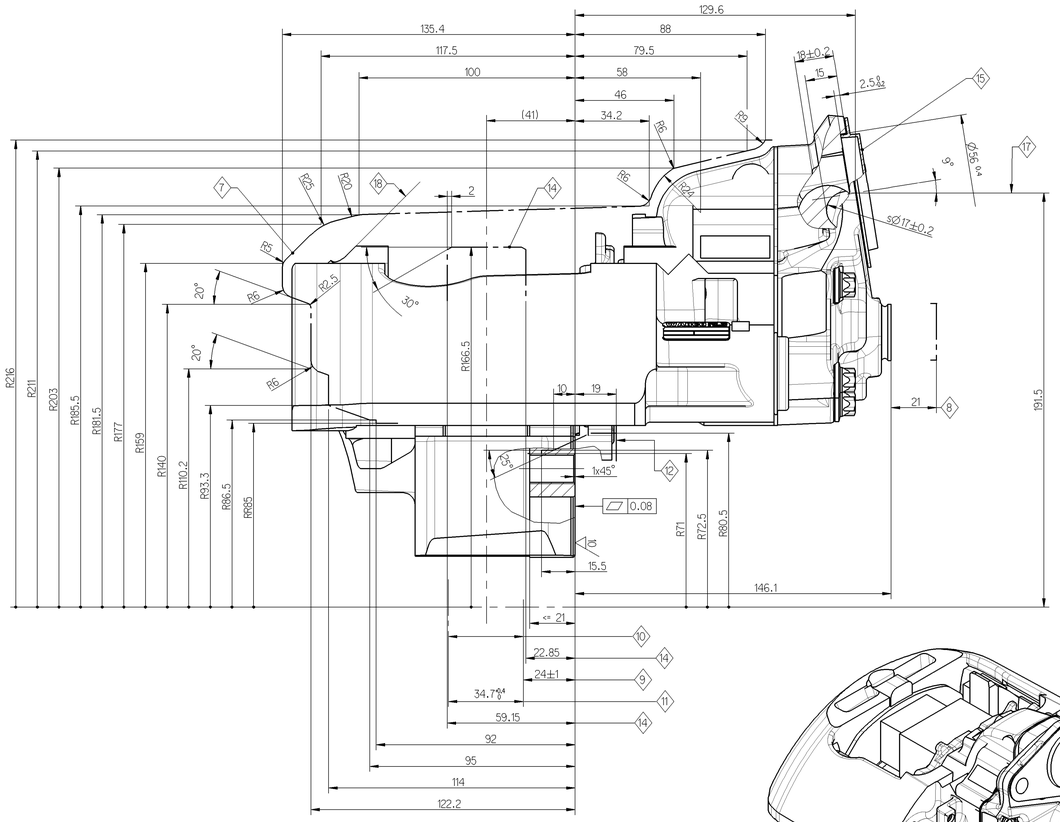

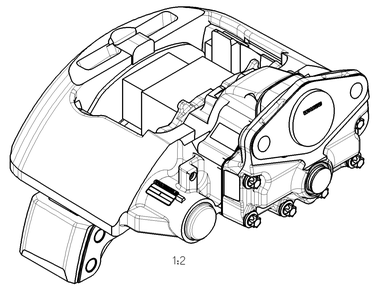

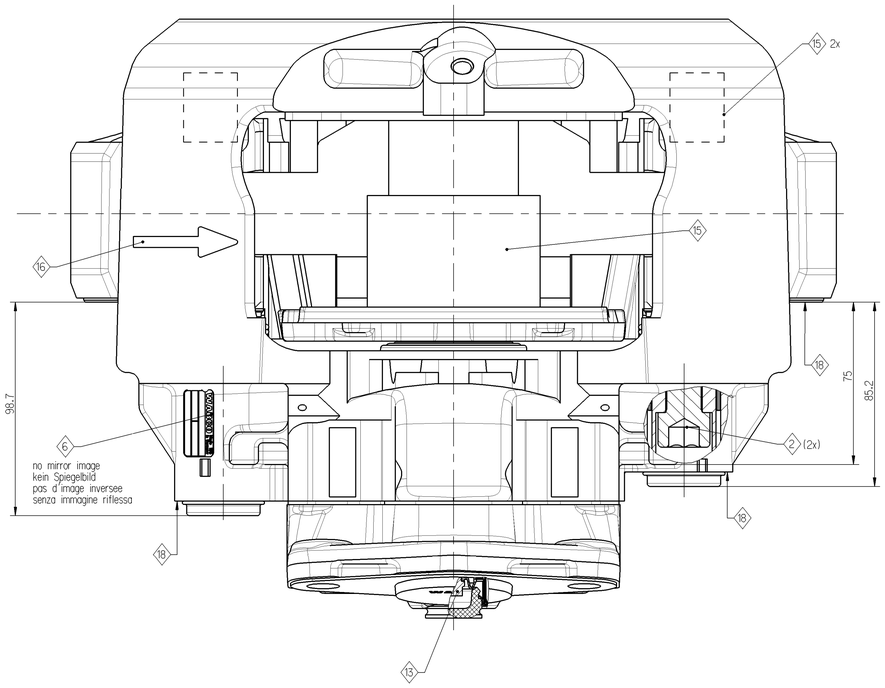

	tightening torque Anziehdrehmoment couple de serrage coppia di serraggio	width over flats SW surplats misura chiave	note Bemerkung remarque annotazione			
1	205 - 225 Nm	18	brake mounting hexagon screw, oiled M14 x 1.5 x ... - 10.9 ALbion No. NJJ 4163 min. thread engagement length = 18 mm max. transferable brake torque = 10000 Nm tightening order 1-6	Bremsenbefestigung Sechskantschraube, geoelt M14 x 1.5 x ... - 10.9 Albion Nr. NJJ 4163 min. Einschraubtiefe = 18 mm max. uebertragbares Bremsmoment = 10000 Nm Anziehreihenfolge 1-6	fixation du frein vis a tete hexagonale, huilee M14 x 1.5 x ... - 10.9 Albion no. NJJ 4163 longueur de vissage min. 18 mm couple de freinage maxi transferable = 10000 Nm ordre de serrage 1-6	fissaggio freno vite a testa esagonale, oliate M14 x 1.5 x ... - 10.9 Albion no. NJJ 4163 lunghezza minima di avvitamento = 18 mm max. momento frenatura trasmissibile = 10000 Nm sequenza di serraggio 1-6
2	340 ± 20 Nm	14	tightening order 1. long bolt DIN 912-M16x1.5x90-12.9 2. short bolt DIN 912-M16x1.5x70-12.9	Anziehreihenfolge 1. Bolzen lang DIN 912-M16x1.5x90-12.9 2. Bolzen kurz DIN 912-M16x1.5x70-12.9	ordre de serrage 1. axe long DIN 912-M16x1.5x90-12.9 2. axe court DIN 912-M16x1.5x70-12.9	sequenza di serraggio 1. viti lunghe DIN 912-M16x1.5x90-12.9 2. viti corte DIN 912-M16x1.5x70-12.9
3	68 ± 5 Nm	E 12	cover fixing DIN 34800 - M10x1x40 - 12.9	Deckelbefestigung DIN 34800 - M10x1x40 - 12.9	fixation couvercle DIN 34800 - M10x1x40 - 12.9	fissaggio coperchio DIN 34800 - M10x1x40 - 12.9
4	22 ± 2 Nm	13	wear indicator fastening ISO 4017-M8x14 zink-plated	Verschleissanzeigebefestigung ISO 4017-M8x14 verzinkt	fixation de l'indicateur d'usure ISO 4017-M8x14 zingue	fissaggio indicatore d'usura ISO 4017-M8x14 zincato
5	210 $^{+0}_{-30}$ Nm	24	operation cylinder M16x1.5	Betaetigungszylinder M16x1.5	actionneur M16x1.5	cilindro operatore M16x1.5

6 product identification WABCO
Kennzeichnung WABCO
identification WABCO
identificazione prodotto WABCO

7 max. rotary outline
maximale Rotationskontur
profil enveloppe maximal
rotazione profilo massimo

8 max. displacement
maximale Verschiebung
deplacement maximal
max. movimento

9 fitting dimension of the disc
Scheibeneinbaumass
dimension de montage du disque
quota fissaggio disco

10 brake disc new 34-0.2, max. wearable up to 28
Bremsscheibe neu 34-0.2, verschleissbar bis 28
disque neuf 34-0.2, a user jusqu'a 28
disco freno nuovo 34-0.2, usurabile fino 28

11 assembly dimension for brake pads
Einbaumass fuer Bremsbeloege
dimension de montage des garnitures
dimensione assemblaggio pastiglie freno

12 envelope circle caliper with cover
Huellkurve Bremssattel mit Deckel
enveloppante etrier avec couvercle
incombro pinza con coperchio

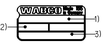

13 hexagon width over flats 8
Sechskant SW 8
tete hexagonale (surplats 8)
esagono SW 8

14 maximum disc clearance
Scheibenfreigang
course libre du disque
max. dimensione installazione disco

15 for storage and shipment
fuer Transport und Lagerung
pour transport et stockage
per stoccaggio e trasporto

16 forward drive-rotation direction
Vorwaerts Drehrichtung
sens de rotation marche avant
rotazione in avanti

17 center line cylinder
Mitte Zylinder
axe median actionneur
centro cilindro

18 uncoated surface
unbeschichtete Oberflaeche
surface non revetue
area senza trattamento superficiale

friction surface Reibflaeche surface de friction area attrito	Ra = 1 - 3 µm Rz <= 20 µm
thickness tolerance Dickentoleranz tolerance d'epaisseur tolleranza spessore	radial max. 0.06 - tangential max. 0.02 radial max. 0.06 - tangential max. 0.02 radial max. 0.06 - tangential max. 0.02 radiale max. 0.06 - tangentiale max. 0.02

brake disc
Bremsscheibe
disque de frein
disco freno

coating
anti-corrosion protection - salt spray test min. 96 hours
Beschichtung
Korrosionsschutz-Salzsprueh nebelpruef. min. 96 Std.
protection de surface
tenue BS 96 h min.
rivestimento
protezione contro la corrosione - prova di resistenza alla nebbia salina dopo almeno 96 h

PAN 17

dimensions without tolerances are gauge dimensions
nicht tolerierte Masse = Lehrenmasse
dimensions non tolerancees = calibres
le dimensioni senza tolleranza sono quelle riferite al calibro

Produkt-Spezifikation 640 175 001 0	
product-specification 640 175 001 0	
40 175 073 (640 175 073 0)	mirror image Spiegelbild image inversee immagine riflessa
40 175 072 (640 175 072 0)	as shown wie gezeichnet comme dessine come disegnato
ident-no brake Mat.-Nr. Bremse reference frein codice materiale freno	customer no. Kundennummer no. du client no. cliente	brake type Ausfuehrung Bremse variante de frein versione freno

General Specifications JED-334-0
Further Technical Data
Doc.-Code: Sheet: To

General Tolerances JED-261

Class 1)	Range of Nominal Dimensions (in mm) ≤ 50	> 50 ≤ 180	> 180 ≤ 400	> 400	∢
Fine	0.5	1.0	1.5	2.0	
Medium	1.0	2.0	3.0	4.0	±3°
Coarse	2.0	3.5	5.0	6.5	

Tapped Holes acc.
1) Tolerance Class Applied Crossmarked

Copyright WABCO®

Date	Signature
Drawn 2010-02-09	Roenz
Checked 2010-02-09	Redemann
Copyd Redemann	

WABCO

Disc brake PAN-range light
Scheibenbremse PAN-Reihe leicht
Frein a disque PAN-type gamme basse
Pinza freno a disco tipo PAN leggero

Mass	Scale	Material No.	Date of first issue
21.173 kg	1:1	40 175 072	2006-04-11
Size A 0	CAD System Pro/E	ECN No. 150048 / Revision J	Doc.-Code 053 / Language ML / Sheet 1/1
		Techo. Resp. 6921	Replacement for

100mm