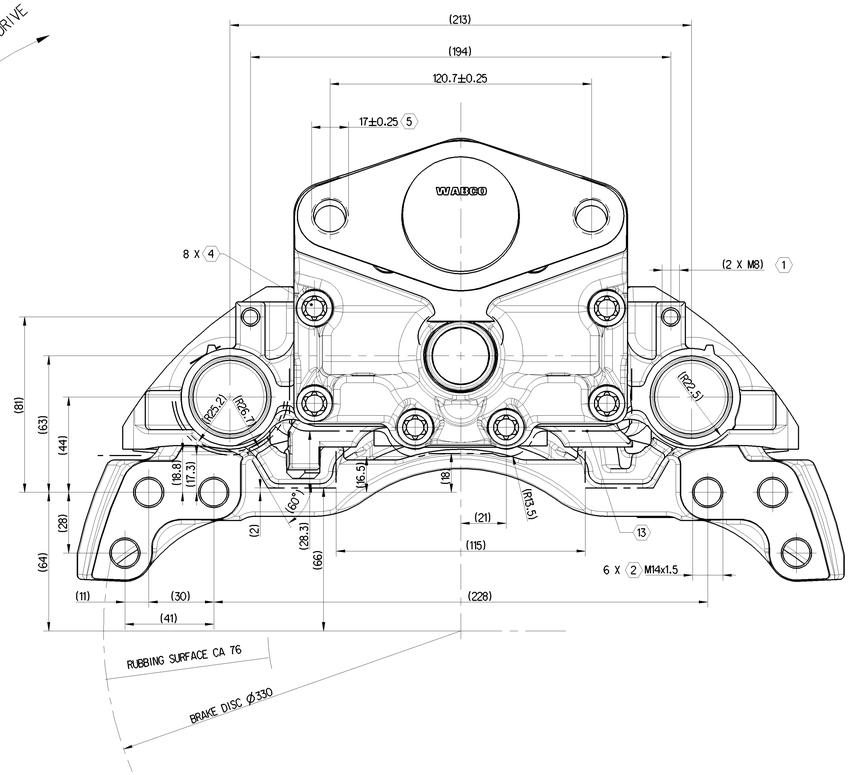

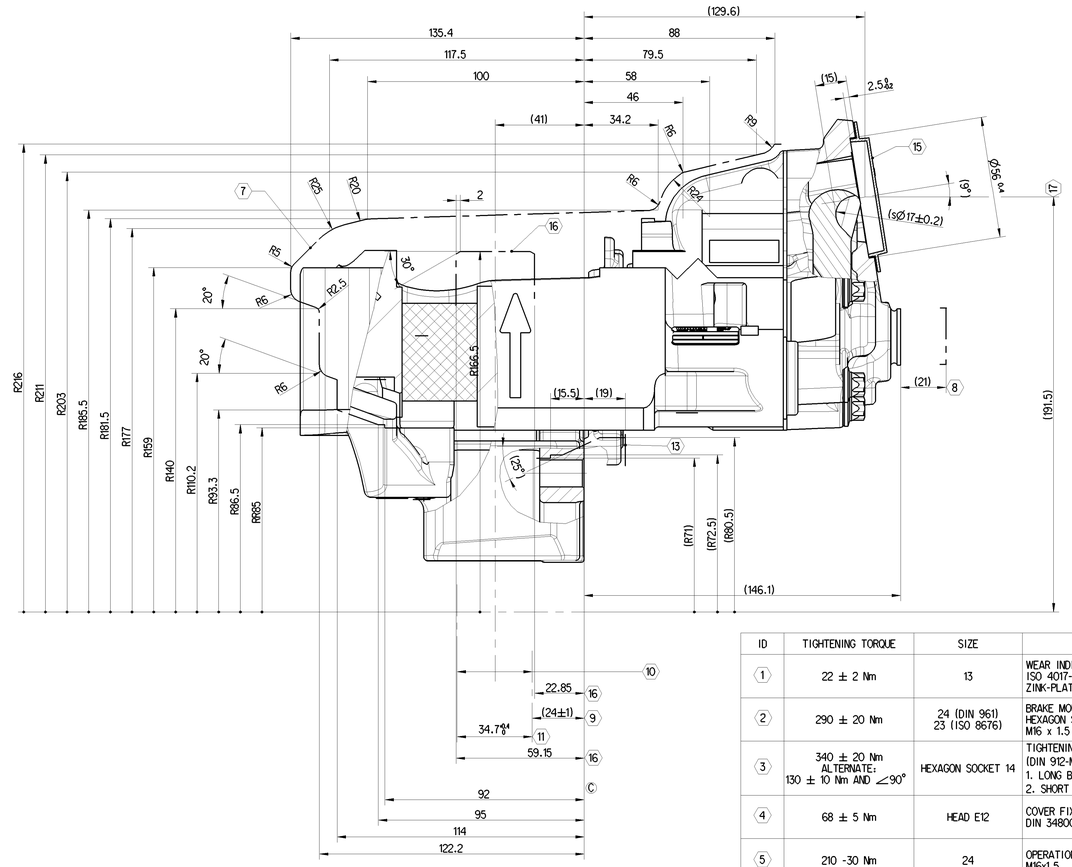

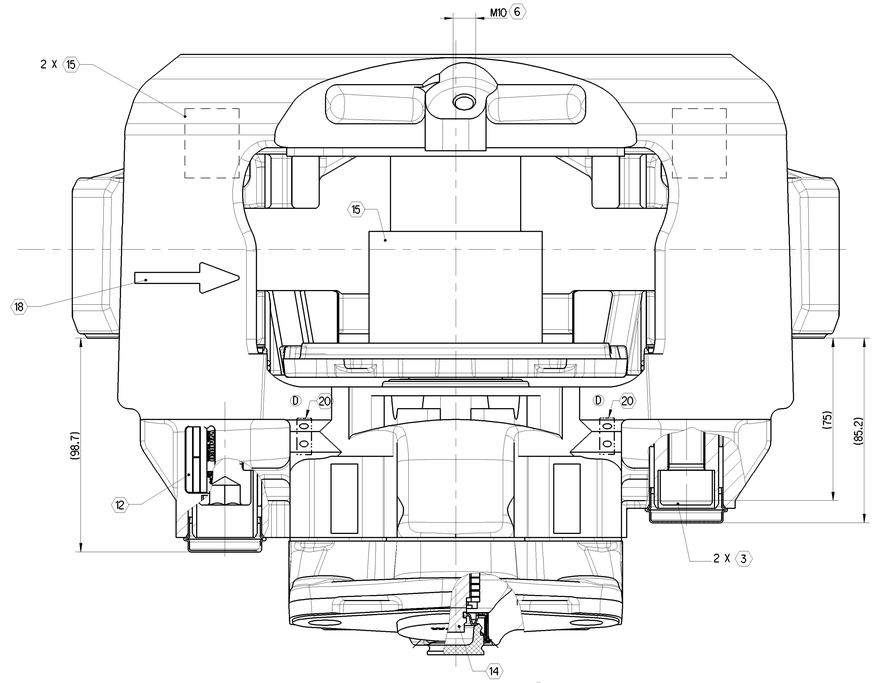

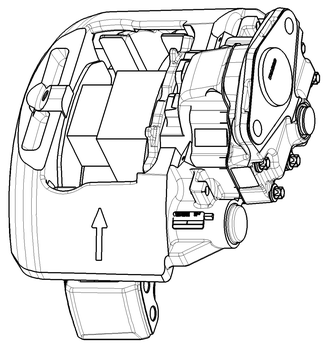

ID	TIGHTENING TORQUE	SIZE	REMARKS
1	22 ± 2 Nm	13	WEAR INDICATOR FASTENING ISO 4017-M8x14 ZINK-PLATED
2	290 ± 20 Nm	24 (DIN 961) 23 (ISO 8676)	BRAKE MOUTING HEXAGON SCREW. OILED M16 x 1.5 x ... - 10.9
3	340 ± 20 Nm ALTERNATE: 130 ± 10 Nm AND ∠90°	HEXAGON SOCKET 14	TIGHTENING ORDER (DIN 912-M16x1.5x80-12.9) 1. LONG BOLT 2. SHORT BOLT
4	68 ± 5 Nm	HEAD E12	COVER FIXING DIN 34800 - M10x1x40 - 12.9
5	210 -30 Nm	24	OPERATION CYLINDER M16x1.5
6	20 ± 2 Nm	17	SCREW FOR LINING RETAINER

7 MAX. ROTARY OUTLINE

8 MAX. DISPLACEMENT

9 FITTING DIMENSION OF THE DISC

10 BRAK DISC NEW 34-0.2, WEARABLE UP TO 28

11 ASSEMBLY DIMENSION FOR BRAKE PADS

12 PRODUCT IDENTIFICATION WABCO

13 ENVELOPE CIRCLE CALIPER WITH COVER

14 HEXAGON HEAD 8

15 FOR STORAGE AND SHIPMENT

16 MAXIMUM DISC CLEARANCE

17 CENTER LINE CYLINDER

18 FORWARD DRIVE - ROTATION DIRECTION

19 BRAKE ACTUATOR SIZE RESTRICTION SEE PART SPECIFICATION 640 175 072 R

ANTI-CORROSION PROTECTION - SALT SPRAY TEST MIN. 96 HOURS

PRODUCT SPECIFICATION 640 175 072 R

DIMENSIONS WITHOUT TOLERANCE ARE GAUGE DIMENSIONS

LABELING INFORMATION

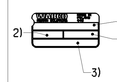

1) CUSTOMER NUMBER (OPTIONAL)
2) DATE OF REMANUFACTURING
3) WABCO ID
4) SERIAL NUMBER

IDENTIFICATION TABLE

REMAN PN	REMANUFACTURED DEVICE OF	REFERENCE DOCUMENT	IMAGE
640 175 072 R	40 175 072	640 175 072 0 (Doc.053)	AS DRAWN
640 175 073 R	40 175 073	640 175 072 0 (Doc.053)	MIRROR

General Specification: JED-334-1
Further Technical Data: 640 175 072 R
Doc. Code: 035 Sheet: 1 To 24
General Tolerances JED-261

Class 1)	Range of Nominal Dimensions (in mm) > 0 ≤ 50	> 50 ≤ 180	> 180 ≤ 400	> 400	∠
Fine	0.5	1.0	1.5	2.0	±3°
Medium X	1.0	2.0	3.0	4.0	
Coarse	2.0	3.5	5.0	6.5	

Tapped Holes acc.
1) Tolerance Class Applied Crosshatched

Copyright WABCO®

Date	Signature
Drawn 2019-07-01	Mucha
Checked 2019-07-01	Goj
Expert Mucha	

WABCO

DISC BRAKE CALIPER TYPE PAN 17

Mass 21.082 kg	Scale 1:1	Material No. 640 175 072 R	Date of 1st issue 2016-09-17	Doc.Code 053	Language EN	Sheet 1/1
Size A0	CAD System CREO	ECN No. 501696	Revision 3x D	Techn. Repl. 2021	Replacement for -	

100mm

Tale Dokumentacja is reproduction or to disclosed, tuck wszelkiej a przekazywanie lub jej osobom trzecim, ani udostępnia i wykorzystywanie jej treści bez pisemnej zgody. Nur innerhalb dieser Unterlagen, Verwendung dieser Unterlagen, Verwertung und Mitteilung ihres Inhalts nicht gestattet, soweit nicht ausdrücklich zugestanden. Im Zuwiderhandlungen verpflichten zu Schadensersatz. Alle Rechte vorbehalten. Ad dovuto per la Ed è vietata la riproduzione, l'uso e la comunicazione a terzi del presente documento, se non espressamente autorizzati. Gli obbligati al risarcimento dei danni. Tutti i diritti sono riservati. Ad dovuto per la Ed è vietata la riproduzione, l'uso e la comunicazione a terzi del presente documento, se non espressamente autorizzati. Gli obbligati al risarcimento dei danni. Tutti i diritti sono riservati.