SAFETY CHARACTERISTICS	0
SIGNIFICANT CHARACTERISTICS	8
CUSTOMER INTERFACE	0

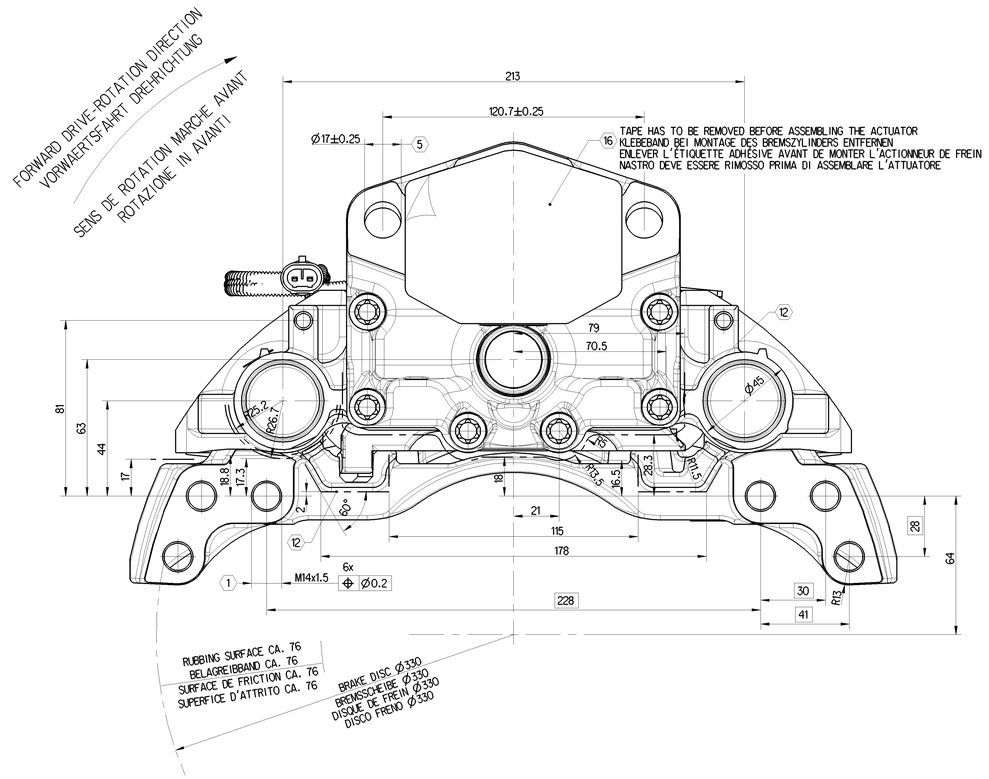

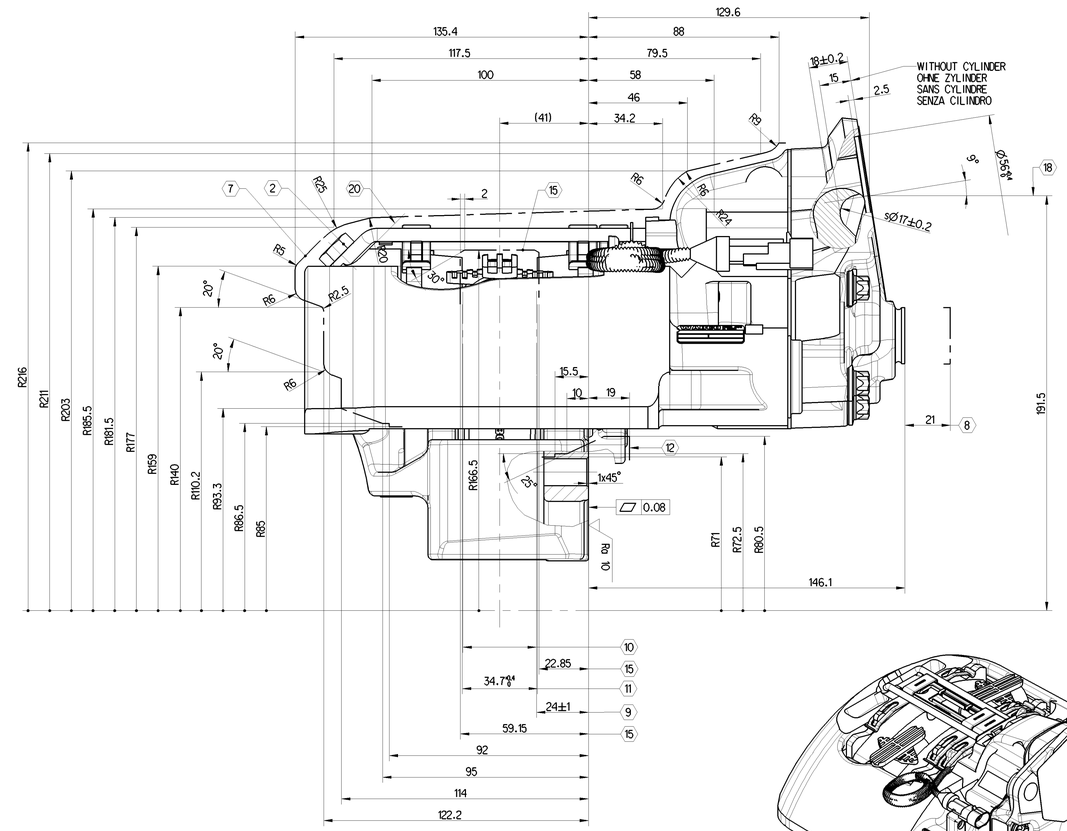

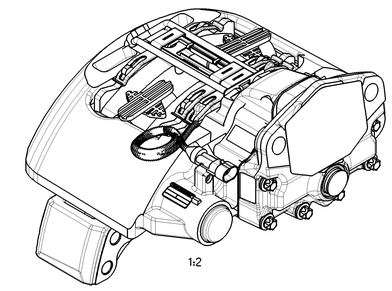

FRICTION MATERIAL JURID 539-20
BELAGQUALITAET JURID 539-20
QUALITE DE GARNITURE JURID 539-20
QUALITA DELLA GUARNIZIONE JURID 539-20

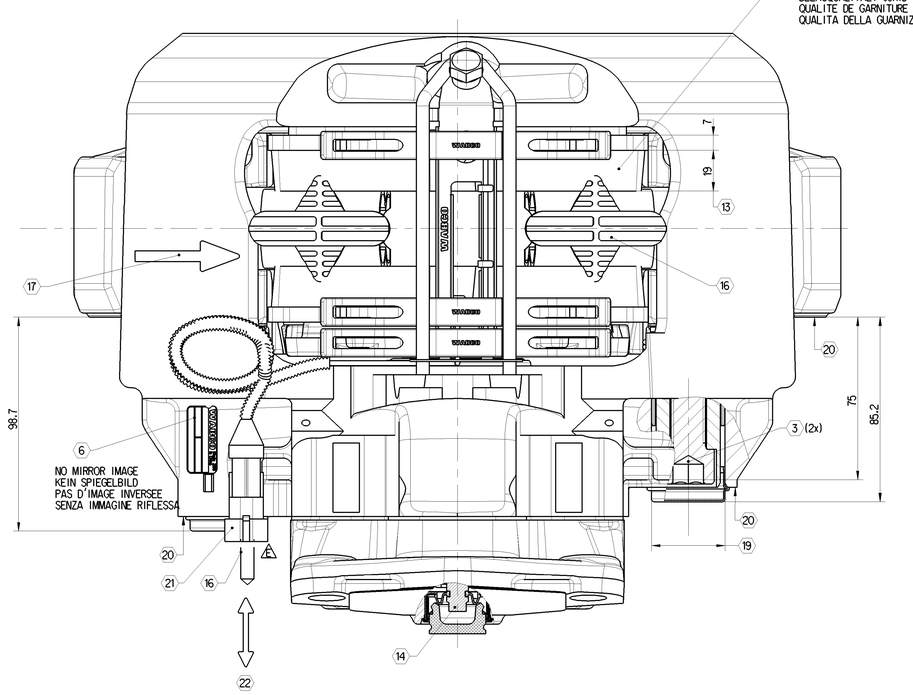

	TIGHTENING TORQUE ANZIEHDREHMOMENT COUPLE DE SERRAGE COPPIA DI SERRAGGIO	WIDTH OVER FLATS SW SURPLATS MISURA CHIAVE	NOTE BEMERKUNG REMARQUE ANNOTAZIONE			
1	180 ± 20 Nm (FOR CUSTOMER INFORMATION)	22 DIN 961 21 ISO 8676	BRAKE MOUNTING HEXAGON SCREW, OILED M14 x 1.5 x ... - 10.9	BREMSENBEFESTIGUNG SECHSKANTSCHRAUBE, GEOELT M14 x 1.5 x ... - 10.9	FIXATION DU FREIN VIS A TETE HEXAGONALE, HUILEE M14 x 1.5 x ... - 10.9	FISSAGGIO FRENO VITE A TESTA ESAGONALE, OLIATE M14 x 1.5 x ... - 10.9
2	20 ± 2 Nm	17	PAD HOLD DOWN DEVICE M10	BUEGELBEFESTIGUNG M10	BARRETTE DE MAINTIEN M10	DISPOSITIVO FISSAGGIO M10
3	340 ± 20 Nm	14	TIGHTENING ORDER 1. LONG BOLT DIN 912-M16x1.5x90-12.9 2. SHORT BOLT DIN 912-M16x1.5x70-12.9	ANZIEHREIHENFOLGE 1. BOLZEN LANG DIN 912-M16x1.5x90-12.9 2. BOLZEN KURZ DIN 912-M16x1.5x70-12.9	ORDRE DE SERRAGE 1. AXE LONG DIN 912-M16x1.5x90-12.9 2. AXE COURT DIN 912-M16x1.5x70-12.9	SEQUENZA DI SERRAGGIO 1. VITI LUNGHE DIN 912-M16x1.5x90-12.9 2. VITI CORTE DIN 912-M16x1.5x70-12.9
4						
5	210 +0 −30 Nm (FOR CUSTOMER INFORMATION)	24	OPERATION CYLINDER M16x1.5	BETAETIGUNGSZYLINDER M16x1.5	ACTIONNEUR M16x1.5	CILINDRO OPERATORE M16x1.5

6 DETAILLIERTE INFORMATIONEN ZUR KENNZEICHNUNG SIEHE 640 175 060 0 DOC. CODE 922
DETAILED INFORMATION FOR MARKING SEE 640 175 060 0 DOC. CODE 922

7 MAX. STATICAL ROTARY OUTLINE
MAXIMALE STATISCHE ROTATIONSKONTUR
PROFIL ENVELOPPE MAXIMAL STATIQUE
ROTAZIONE PROFILO MASSIMO STATICO

8 MAX. DISPLACEMENT
MAXIMALE VERSCHIEBUNG
DEPLACEMENT MAXIMAL
MAX. MOVIMENTO

9 FITTING DIMENSION OF THE DISC
SCHEIBENEINBAUMASS
DIMENSION DE MONTAGE DU DISQUE
QUOTA FISSAGGIO DISCO

10 BRAKE DISC NEW 34-0.2, MAX. WEARABLE UP TO 28
BREMSSCHEIBE NEU 34-0.2, VERSCHLEISSBAR BIS 28
DISQUE NEUF 34-0.2, A USER JUSQU'A 28
DISCO FRENO NUOVO 34-0.2, USURABILE FINO 28

11 ASSEMBLY DIMENSION FOR BRAKE PADS
EINBAUMASS FUER BREMSBELAEGE
DIMENSION DE MONTAGE DES GARNITURES
DIMENSIONE ASSEMBLAGGIO PASTIGLIE FRENO

12 ENVELOPE CIRCLE CALIPER WITH COVER
HUELLKURVE BREMSSATTEL MIT DECKEL
ENVELOPPANTE ETRIER AVEC COUVERCLE
INCOMBRO PINZA CON COPERCHIO

13 REMAINING LINING THICKNESS 2
RESTBELAGSTAERKE 2
EPAISSEUR GARNITURE RESTANTE 2
SPESSORE RESIDUO PASTIGLIA 2

14 HEXAGON WIDTH OVER FLATS 8
SECHSKANT SW 8
TETE HEXAGONALE (SURPLATS 8)
ESAGONO SW 8

15 MAXIMUM DISC CLEARANCE
SCHEIBENFREIGANG
COURSE LIBRE DU DISQUE
MAX. DIMENSIONE INSTALLAZIONE DISCO

16 FOR STORAGE AND SHIPMENT
FUER TRANSPORT UND LAGERUNG
POUR TRANSPORT ET STOCKAGE
PER STOCCAGGIO E TRASPORTO

17 FORWARD DRIVE-ROTATION DIRECTION
VORWAERTS DREHRICHTUNG
SENS DE ROTATION MARCHE AVANT
ROTAZIONE IN AVANTI

18 CENTER LINE CYLINDER
MITTE ZYLINDER
AXE MEDIAN ACTIONNEUR
CENTRO CILINDRO

19 GREASED WITH SHELL DARINA 2
WEAR LIMIT Ø30.2
GEFETTET MIT SHELL DARINA 2
VERSCHLEISSGRENZE Ø30.2
GRAISSE AVEC SHELL DARINA 2
LIMITE D'USURE Ø30.2
INGRASSATO CON SHELL DARINA 2
CONSUMA LIMITE Ø30.2

20 UNCOATED SURFACE
UNBESCHICHTETE OBERFLAECHE
SURFACE NON REVETUE
AREA SENZA TRATTAMENTO SUPERFICIALE

21 CONNECTOR TYPE AMP 0-0282104-1
STECKER TYP AMP 0-0282104-1
CONNECTEUR TYPE AMP 0-0282104-1
CONNETTORE TIPO AMP 0-0282104-1

22 COUNTERPART: CONNECTOR TYPE AMP 282080-1
(NOT SUPPLIED WITH BRAKE)
GEGENSTUECK: STECKER TYP AMP 282080-1
(NICHT BESTANDTEIL DER BREMSE)
PENDANT: CONNECTEUR TYPE AMP 282080-1
(NON FOURNI AVEC LE FREIN)
OGGETTO DI RISCONTRO: CONNETTORE TIPO AMP 282080-1
(NON FORNITO CON IL FRENO)

DIMENSIONS WITHOUT TOLERANCES ARE GAUGE DIMENSIONS
NICHT TOLERIERTE MASSE = LEHRENMASSE
DIMENSIONS NON TOLERANCEES = CALIBRES
LE DIMENSIONI SENZA TOLLERANZA SONO QUELLE RIFERTITE AL CALIBRO

COATING
ANTI-CORROSION PROTECTION - SALT SPRAY TEST MIN. 96 HOURS
BESCHICHTUNG
KORROSIONSSCHUTZ-SALZSPRUEHNEBELPRUEF. MIN. 96 STD.
PROTECTION DE SURFACE
TENUE BS 96 H MIN.
RIVESTIMENTO
PROTEZIONE CONTRO LA CORROSIONE - PROVA DI RESISTENZA ALLA NEBBIA SALINA DOPO ALMENO 96 H

PRODUKT-SPEZIFIKATION 640 175 000 0
PRODUCT-SPECIFICATION 640 175 000 0

640 175 133 0		MIRROR IMAGE SPIEGELBILD IMAGE INVERSEE IMMAGINE RIFLESSA
640 175 132 0		AS SHOWN WIE GEZEICHNET COMME DESSINE COME DISEGNATO
IDENT-NO BRAKE MAT.-NR. BREMSE REFERENCE FREIN CODICE MATERIALE FRENO	CUSTOMER NO. KUNDENNUMMER NO. DU CLIENT NO. CLIENTE	BRAKE TYPE AUSFUEHRUNG BREMSE VARIANTE DE FREIN VERSIONE FRENO

General Specification: JED-334-1 , Size ISO 14405 LP
Further Technical Data:
Doc. Code: | Sheet: | To

General Tolerances JED-261

Class 1)	Range of Nominal Dimensions (in mm) ≤ 50	> 50 ≤ 180	> 180 ≤ 400	> 400	
Fine	0.5	1.0	1.5	2.0	±3°
Medium	1.0	2.0	3.0	4.0	
Coarse	2.0	3.5	5.0	6.5	

Tapped Holes acc.: -
1) Tolerance Class Applied Crossmarked

Copyright WABCO®

Date	Signature	
Drawn 2022-07-16	Nainor	
Checked 2022-08-08	Redemann	
Expert Redemann		
Meas. 23.729 kg	Scale 1 : 1	
Size A 0	CAD System CREO	

WABCO

DISC BRAKE PAN-RANGE LIGHT
SCHEIBENBREMSE PAN-REIHE LEICHT
FREIN A DISQUE PAN-TYPE GAMME BASSE
PINZA FRENO A DISCO TIPO PAN LEGGERO

Material No. 640 175 132 0

Doc.Code	Language	Sheet
053	ML	1/1

Date of first issue: 2016-09-28

Ecl.No.	Revision	Techn. Resp.	Replacement for
505014	tx E	6921	-

100mm