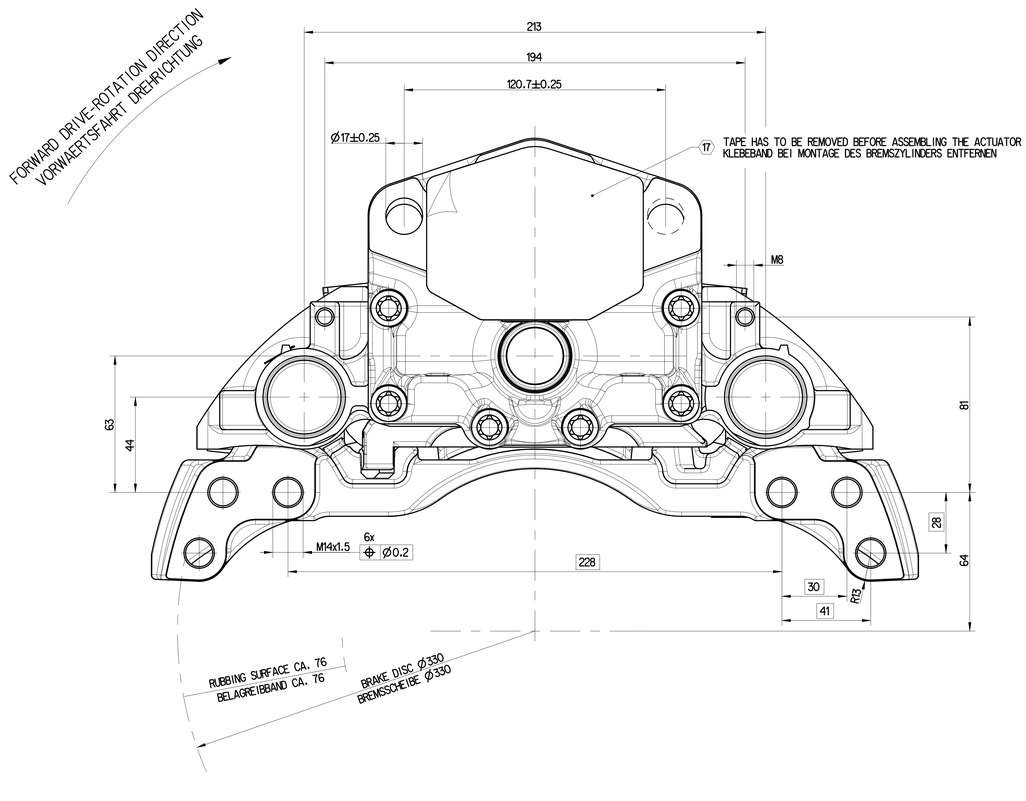

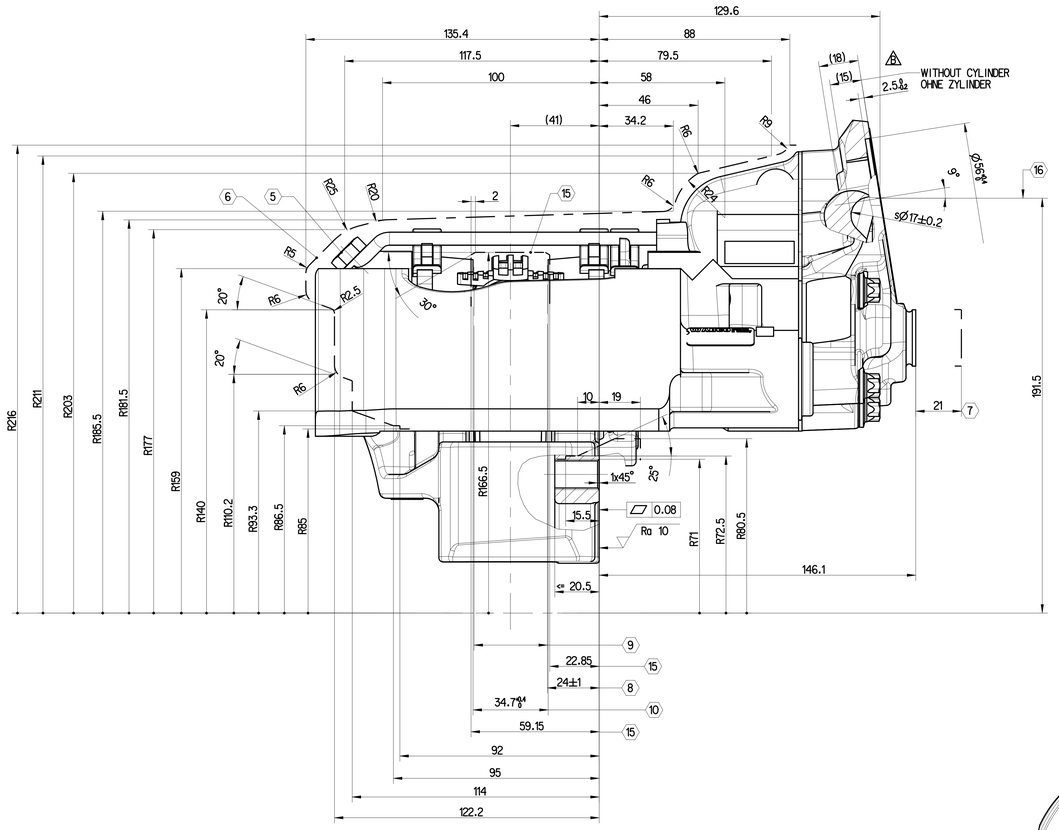

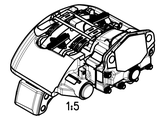

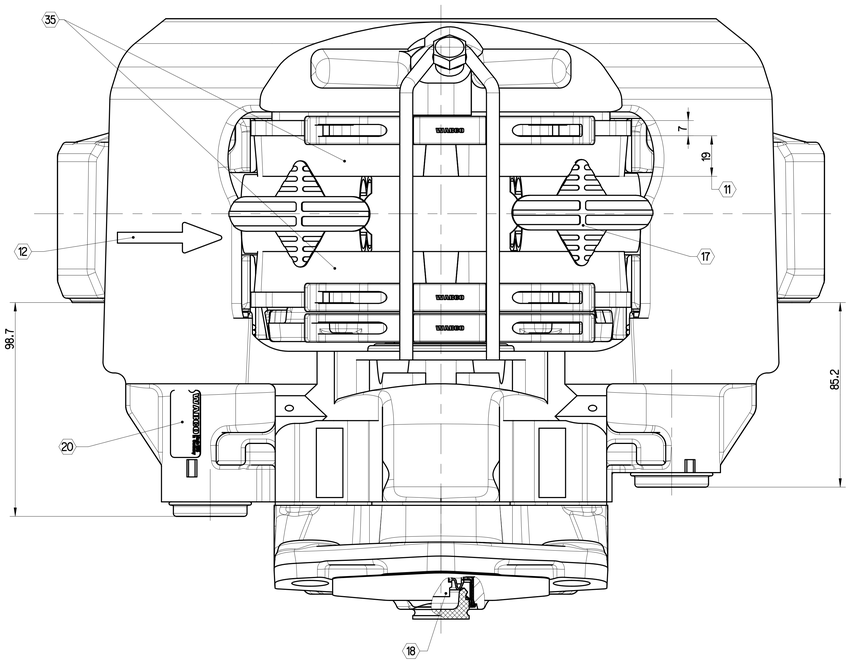

	NOTE BEMERKUNG	TIGHTENING TORQUE ANZIEHDREHMOMENT	WIDTH OVER FLATS SW
1	-	-	-
2	-	-	-
3	-	-	-
4	-	-	-
5	PAD HOLD DOWN DEVICE BUEGELBEFESTIGUNG M10	20 ± 2 Nm	17

	NOTE BEMERKUNG	TIGHTENING TORQUE ANZIEHDREHMOMENT	WIDTH OVER FLATS SW
21	-	-	-
22	-	-	-
23	-	-	-
24	-	-	-
25	-	-	-

6 MAX. ROTARY OUTLINE
MAXIMALE ROTATIONSKONTUR

7 MAX. DISPLACEMENT
MAXIMALE VERSCHIEBUNG

8 PERMISSIBLE FITTING DIMENSION OF THE DISC
ZULAESSIGES SCHEIBENEINBAUMASS

9 BRAKE DISC NEW 34-0.2 WEARABLE UP TO: 28
BREMSSCHEIBE NEU VERSCHLEISSBAR BIS:

10 ASSEMBLY DIMENSION FOR BRAKE PADS
EINBAUMASS FUER BREMSBELAEGE

11 REMAINING LINING THICKNESS 2 mm
RESTBELAGSTAERKE

12 FORWARD DRIVE - ROTATION DIRECTION
VORWAERTS DREHRICHTUNG

13 . . .

14 . . .

15 MAXIMUM DISC CLEARANCE
SCHEIBENFREIGANG

16 CENTER LINE CYLINDER
MITTE ZYLINDER

17 FOR SHIPMENT AND STORAGE
FUER TRANSPORT UND LAGERUNG

18 HEXAGON WIDTH OVER FLATS 8
SECHSKANT SW

19

20 DETAILED INFORMATION FOR MARKING: 640 175 060 0 DOC. CODE 922
DETAILLIERTE INFORMATIONEN ZUR KENNZEICHNUNG:

21 . . .

22 . . .

23 . . .

24 . . .

25 . . .

26 . . .

27 . . .

28 . . .

29 . . .

30 . . .

31 . . .

32 . . .

33 . . .

34 . . .

B

IDENT-NO BRAKE MATERIAL-NR. BREMSE	PAD MATERIAL BELAGQUALITAET	35 UMWELTKENNZEICHNUNG BREMSBELAG ENVIRONMENTAL MARKING BRAKEPAD SAE J866	BRAKE TYPE AUSFUEHRUNG BREMSE
640 175 147 0	WABCO 238	N	MIRROR IMAGE SPIEGELBILD
640 175 146 0			AS SHOWN WIE GEZEICHNET
640 175 141 0	WABCO 232	B	MIRROR IMAGE SPIEGELBILD
640 175 140 0			AS SHOWN WIE GEZEICHNET

COATING
ANTI-CORROSION PROTECTION - SALT SPRAY TEST MIN. 96 HOURS
BESCHICHTUNG
KORROSIONSSCHUTZ-SALZSPRUEHNEBELPRUEF. MIN. 96 STD.

PAN17

PRODUCT SPECIFICATION: 640 175 001 0
PRODUKT SPEZIFIKATION:

DIMENSIONS WITHOUT TOLERANCES ARE GAUGE DIMENSIONS
NICHT TOLERIERTE MASSE = LEHREMMASSE

General Specifications: ISO 8015, JED-334-1, Size ISO 14405 E
Further Technical Data:
Doc. Code: Sheet: To:

General Tolerances JED-261

Class 1)	Range of nominal dimensions in mm				
	> 0.5 ≤ 50	> 50 ≤ 180	> 180 ≤ 400	> 400	
Fine	±0.5	±1	±1.5	±2	
Medium X	±1	±2	±3	±4	±3°
Coarse	±2	±3.5	±5	±6.5	

Tapped Holes acc.:
1) Tolerance Class Applied Crossmarked

Copyright ZF®

	Name	Date	Signature
Drawn	Rönz	2024-08-08	
Checked	Redemann	2024-08-08	

DISC BRAKE PAN-RANGE LIGHT
SCHEIBENBREMSE PAN-REIHE LEICHT

Mass	Scale	Material No.	Date of first issue: 2021-10-07
23.612 kg	1 : 1	640 175 140 0	Doc.Code: 053 Language: DE Sheet: 1/1
Size: A 0	CAD System: CREO	EDB-No.: 517519 Revision: 3x B Techn. Resp.: 6921	Replacement for

100mm

Tale Documento la riproduzione o la diffusione, tutta esplicita o comunicazione a terzi senza vari terzi, dal contenuto esplicito. Sul rimpiazzo è ciò ogni contrario al dritto esser di ancora che tutto di vietato. Se ai ZF AFTERMARKET S.r. Indennizzo.
Este documento, esta transmitiendo, este utilizaje, reservado así también los reclamo del grupo. Todos los derechos, incluso para el caso de concesión de la patente, marca o diseño registrado, están reservados a la sociedad ZF AFTERMARKET S.r. Indemnizaje.
Ce document est protégé par le droit d'auteur. Toute reproduction, utilisation ou communication à des tiers sans autorisation est interdite. Tous droits de propriété intellectuelle, tels que droits d'auteur, droits de marque ou de dessin et modèle, lui appartiennent de plein droit. Le non-respect de ces droits engage la responsabilité du contrevenant. Sous réserve d'un accord contraire, ZF AFTERMARKET S.r. est exclusivement habilitée à en réclamer le bénéfice.
Dit document is beschermd door auteursrechten. Elke reproduktie, gebruik of mededeling aan derden zonder voorafgaande toestemming van ZF AFTERMARKET S.r. is verboden. Alle rechten van de ZF AFTERMARKET S.r. voorbehouden, met uitzondering van de rechten van de derden.
Copyright © This document and parts is to others not be or be or permission of the owners. Every violation entitles ZF AFTERMARKET S.r. to claim damages. All rights are reserved to the ZF AFTERMARKET S.r. in the case of the grant of a patent or registration of a utility model or design.