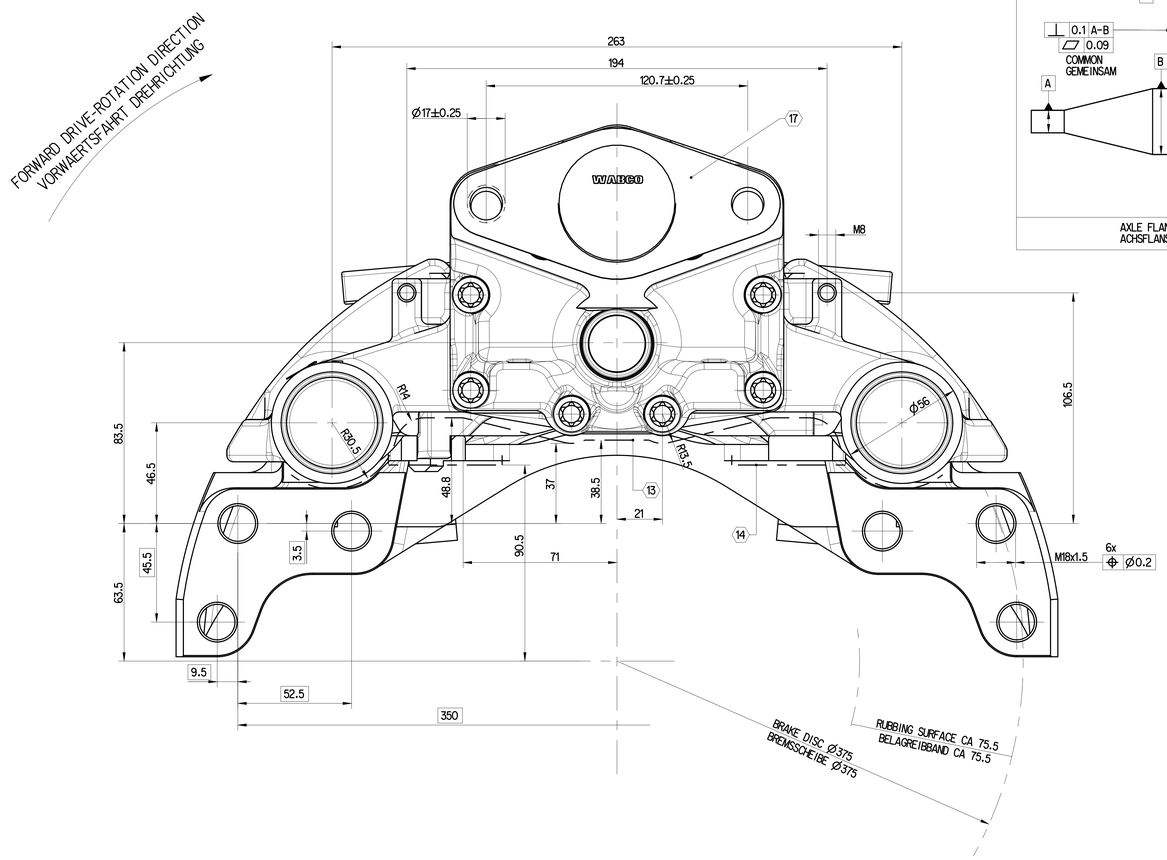

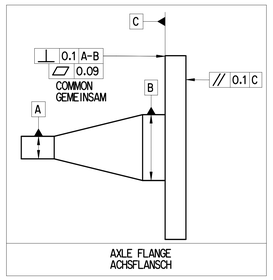

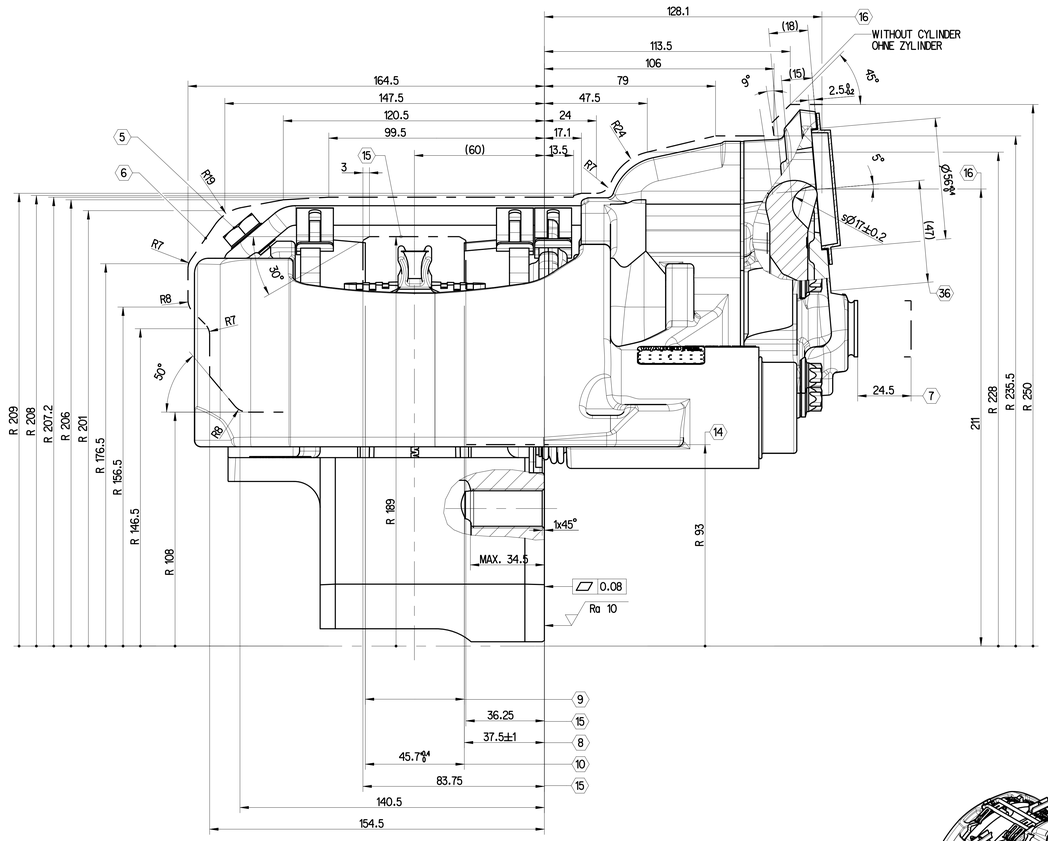

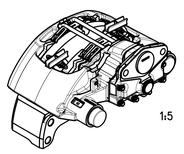

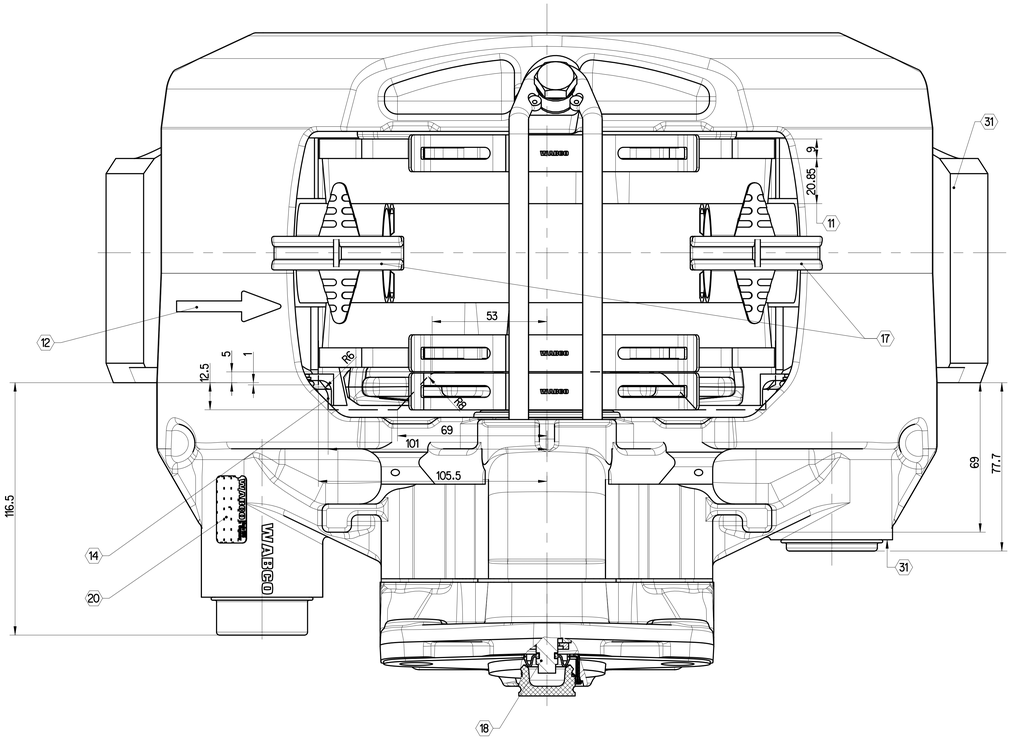

	NOTE BEMERKUNG	TIGHTENING TORQUE ANZIEHDREHMOMENT	WIDTH OVER FLATS SW
1	-	-	-
2	-	-	-
3	-	-	-
4	-	-	-
5	PAD HOLD DOWN DEVICE BUEGELBEFESTIGUNG DIN 933 M10x20 -8.8 MICROENCAPSULATED MIKROVERKAPSELT	30 + 15 Nm	17

	NOTE BEMERKUNG	TIGHTENING TORQUE ANZIEHDREHMOMENT	WIDTH OVER FLATS SW
21	---	-	-
22	---	-	-
23	---	-	-
24	---	-	-
25	---	-	-

6 MAX. ROTARY OUTLINE
MAXIMALE ROTATIONSKONTUR

7 MAX. DISPLACEMENT
MAXIMALE VERSCHIEBUNG

8 PERMISSIBLE FITTING DIMENSION OF THE DISC
ZULAESSIGES SCHEIBENEINBAUMASS

9 BRAKE DISC NEW 45-0.2 WEARABLE UP TO: 38
BREMSSCHEIBE NEU VERSCHLEISSBAR BIS:

10 ASSEMBLY DIMENSION FOR BRAKE PADS
EINBAUMASS FUER BREMSBELAEGE

11 REMAINING LINING THICKNESS 2 mm
RESTBELAGSTAERKE

12 FORWARD DRIVE - ROTATION DIRECTION
VORWAERTS DREHRICHTUNG

13 ENVELOPE CURVE CALIPER WITH COVER
HUELLKURVE BREMSSATTEL MIT DECKEL

14 ENVELOPE CURVE CARRIER
HUELLKURVE BREMSENTRAEGER

15 MAXIMUM DISC CLEARANCE
SCHEIBENFREIGANG

16 CENTER LINE CYLINDER
MITTE ZYLINDER

17 FOR SHIPMENT AND STORAGE
FUER TRANSPORT UND LAGERUNG

18 HEXAGON WIDTH OVER FLATS 8
SECHSKANT SW

19 - - -

20 DETAILED INFORMATION FOR MARKING: 640 175 060 0 DOC. CODE 922
DETAILLIERTE INFORMATIONEN ZUR KENNZEICHNUNG:

26 - - -

27 - - -

28 - - -

29 - - -

30 - - -

31 UNCOATED SURFACE
UNBESCHICHTETE OBERFLAECHE

32 - - -

33 - - -

34 ----

35 - - -

36 BRAKE ACTUATOR SIZE RESTRICTION SEE PART SPECIFICATON 640 195 001 0 MAX. ACTUATOR TYPE 24
ZYLINDERANSCHLUSSMASSE NACH PART SPEZIFIKATION MAX. ZYLINDER TYP

COATING
ANTI-CORROSION PROTECTION - SALT SPRAY TEST MIN. 96 HOURS
BESCHICHTUNG
KORROSIONSSCHUTZ-SALZSPRUEHNEBELPRUEF. MIN. 96 STD.

40 195 056	MIRROR IMAGE SPIEGELBILD
40 195 055	AS SHOWN WIE GEZEICHNET
IDENT-NO. BRAKE MATERIAL-NR. BREMSE	EXECUTION AUSFUEHRUNG

PAN19-1

PRODUCT SPECIFICATION: 640 195 001 0
PRODUKT SPEZIFIKATION:

DIMENSIONS WITHOUT TOLERANCES ARE GAUGE DIMENSIONS
NICHT TOLERIERTE MASSE = LEHRENMASSE

General Specifications: ISO 8015, JED-334-1, Size ISO 14405 LP
Further Technical Data:
Doc. Code: Sheet: To
General Tolerances JED-261

Class	1)	Range of nominal dimensions in mm ≤ 50	> 50 ≤ 180	> 180 ≤ 400	> 400	∡
Fine		±0.5	±1	±1.5	±2	
Medium	X	±1	±2	±3	±4	±3°
Coarse		±2	±3.5	±5	±6.5	

Tapped Holes acc.:
1) Tolerance Class Applied Crossmarked

Copyright ZF®

Date	Signature
2025-02-26	P Sadasivam
2025-03-03	Montag

DISC BRAKE PAN-RANGE LIGHT
SCHEIBENBREMSE PAN-REIHE LEICHT

Dimensions in mm

Mass	Scale	Material No.			Date of first issue: 2006-05-22
32.779 kg	1:1	40 195 055			Doc.Code / Language / Sheet: 053 / ML / 1/1
Size	CAD System				
A 0	CREO	ECN-No. 516540	Revision tx K	Techn. Resp. 6921	Replacement for -

100mm