SAFETY CHARACTERISTICS	0
SIGNIFICANT CHARACTERISTICS	0
CUSTOMER INTERFACE	0

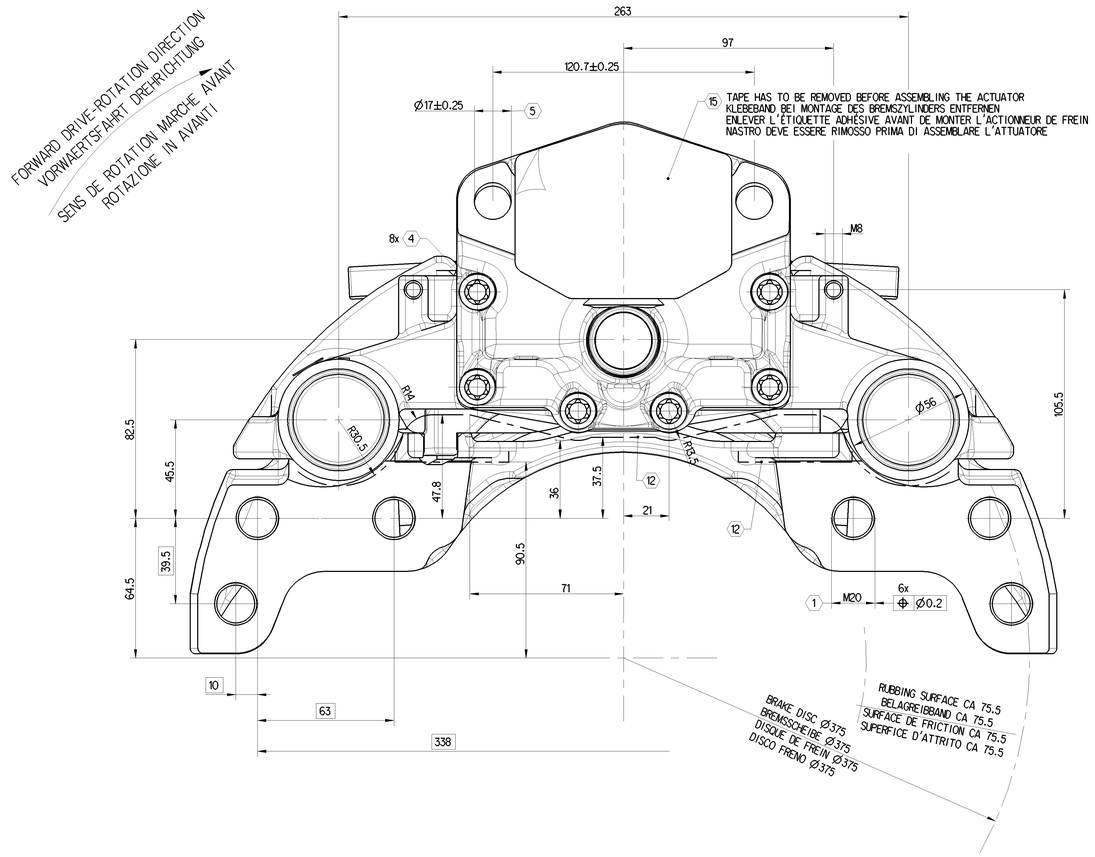

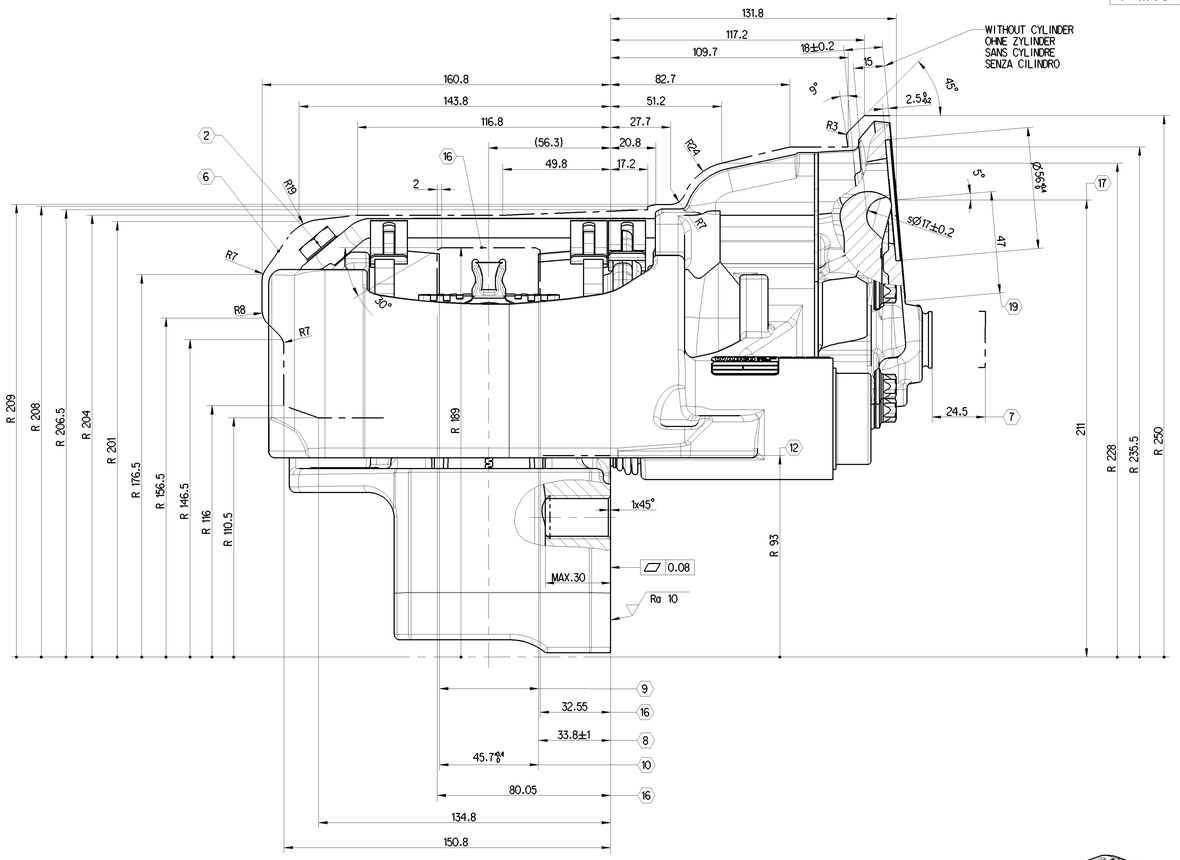

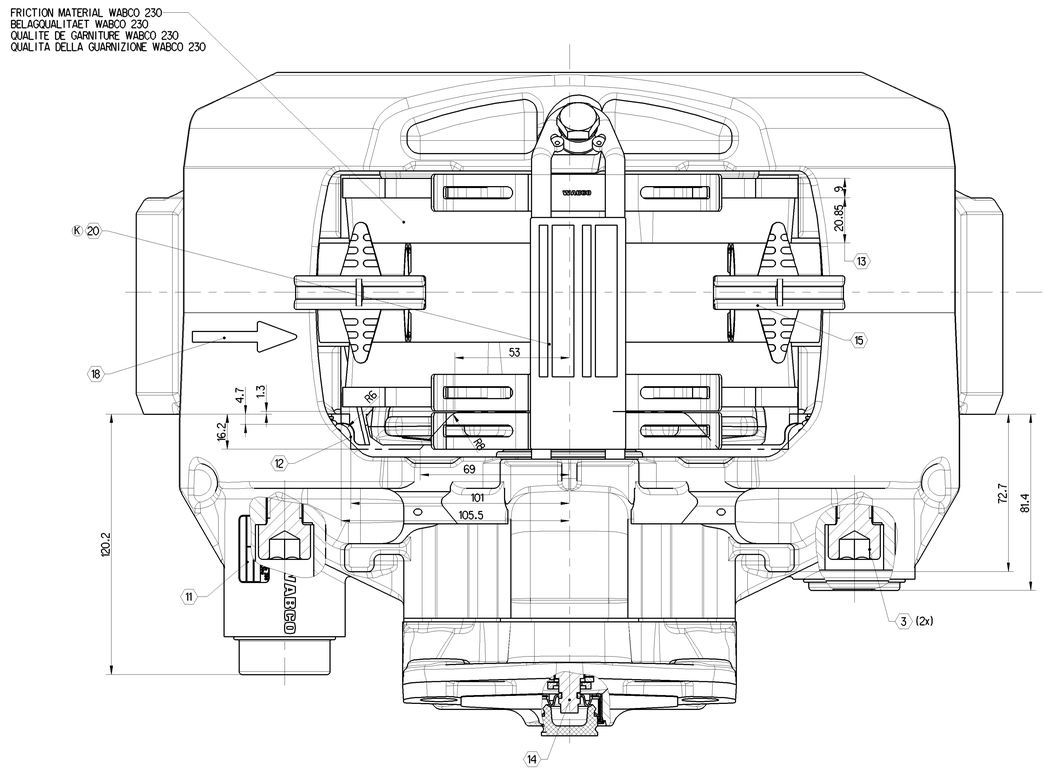

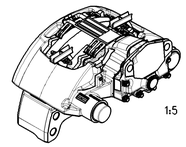

	TIGHTENING TORQUE ANZIEHDREHMOMENT COUPLE DE SERRAGE COPPIA DI SERRAGGIO	WIDTH OVER FLATS SW SURPLATS MISURA CHIAVE	NOTE BEMERKUNG REMARQUE ANNOTAZIONE			
1	500 ± 36 Nm	30	BRAKE MOUNTING HEXAGON SCREW, OILED M20 x ... - 10.9	BREMSENBEFESTIGUNG SECHSKANTSCHRAUBE, GEOELT M20 x ... - 10.9	FIXATION DU FREIN VIS A TETE HEXAGONALE, HUILEE M20 x ... - 10.9	FISSAGGIO FRENO VITE A TESTA ESAGONALE, OLIATE M20 x ... - 10.9
2	30 + 15 Nm	17	PAD HOLD DOWN DEVICE DIN 933 - M10x20 - 8.8 MICROENCAPSULATED	BUEGELBEFESTIGUNG DIN 933 - M10x20 - 8.8 MIKROVERKAPSELT	BARRETTE DE MAINTIEN DIN 933 - M10x20 - 8.8 MICRO ENROBAGE	DISPOSITIVO FISSAGGIO DIN 933 - M10x20 - 8.8 MICRO RIVESTIMENTO
3	340 ± 20 Nm	14	TIGHTENING ORDER 1. LONG BOLT DIN 912-M16x1.5x60-12.9 2. SHORT BOLT	ANZIEHREIHENFOLGE 1. BOLZEN LANG DIN 912-M16x1.5x60-12.9 2. BOLZEN KURZ	ORDRE DE SERRAGE 1. AXE LONG DIN 912-M16x1.5x60-12.9 2. AXE COURT	SEQUENZA DI SERRAGGIO 1. VITI LUNGHE DIN 912-M16x1.5x60-12.9 2. VITI CORTE
4	68 ± 5 Nm	E12	COVER FIXING DIN 34800 - M10x1x40 - 12.9	DECKELBEFESTIGUNG DIN 34800 - M10x1x40 - 12.9	FIXATION COUVERCLE DIN 34800 - M10x1x40 - 12.9	FISSAGGIO COPERCHIO DIN 34800 - M10x1x40 - 12.9
5	210 -30 Nm	24	OPERATION CYLINDER M16x1.5	BETAETIGUNGSZYLINDER M16x1.5	ACTIONNEUR M16x1.5	CILINDRO OPERATORE M16x1.5

6. MAX. STATICAL ROTARY OUTLINE
MAXIMALE STATISCHE ROTATIONSKONTUR
PROFIL ENVELOPPE MAXIMAL STATIQUE
ROTAZIONE PROFILO MASSIMO STATICO

7. MAX. DISPLACEMENT
MAXIMALE VERSCHIEBUNG
DEPLACEMENT MAXIMAL
MAX. MOVIMENTO

8. FITTING DIMENSION OF THE DISC
SCHEIBENEINBAUMASS
DIMENSION DE MONTAGE DU DISQUE
QUOTA FISSAGGIO DISCO

9. BRAKE DISC NEW 45-0.2, WEARABLE UP TO 37
BREMSSCHEIBE NEU 45-0.2, VERSCHLEISSBAR BIS 37
DISQUE NEUF 45-0.2, A USER JUSQU'A 37
DISCO FRENO NUOVO 45-0.2, USURABILE FINO 37

10. ASSEMBLY DIMENSION FOR BRAKE PADS
EINBAUMASS FUER BREMSBELAEGE
DIMENSION DE MONTAGE DES GARNITURES
DIMENSIONE ASSEMBLAGGIO PASTIGLIE FRENO

11. DETAILLIERTE INFORMATIONEN ZUR KENNZEICHNUNG SIEHE 640 175 060 0 DOC. CODE 922
DETAILED INFORMATION FOR MARKING SEE 640 175 060 0 DOC. CODE 922

12. ENVELOPE CIRCLE CALIPER WITH COVER
HUELLKURVE BREMSSATTEL MIT DECKEL
ENVELOPPANTE ETRIER AVEC COUVERCLE
INCOMBRO PINZA CON COPERCHIO

13. REMAINING LINING THICKNESS 2
RESTBELAGSTAERKE 2
EPAISSEUR GARNITURE RESTANTE 2
SPESSORE RESIDUO PASTIGLIA 2

14. HEXAGON WIDTH OVER FLATS 8 mm
SECHSKANT SW 8
TETE HEXAGONALE (SURPLATS 8)
ESAGONO SW 8

15. FOR STORAGE AND SHIPMENT
FUER TRANSPORT UND LAGERUNG
POUR TRANSPORT ET STOCKAGE
PER STOCCAGGIO E TRASPORTO

16. MAXIMUM DISC CLEARANCE
SCHEIBENFREIGANG
COURSE LIBRE DU DISQUE
MAX. DIMENSIONE INSTALLAZIONE DISCO

17. CENTER LINE CYLINDER
MITTE ZYLINDER
AXE MEDIAN ACTIONNEUR
CENTRO CILINDRO

18. FORWARD DRIVE - ROTATION DIRECTION
VORWAERTS DREHRICHTUNG
SENS DE ROTATION MARCHE AVANT
ROTAZIONE IN AVANTI

19. BRAKE ACTUATOR SIZE RESTRICTION SEE PART SPECIFICATION
640 195 000 0 MAX. ACTUATOR TYPE 24
ZYLINDERANSCHLUSSMASSE NACH PART SPEZIFIKATION
640 195 000 0 MAX. ZYLINDER TYP 24
DIMENSION DE CONNEXION DE CYLINDRE DE FREIN PART SPECIFICATION
640 195 000 0 LIMITATION TAILLE DE CYLINDRE, MAX. ACCEPTEE TYPE 24
PER MISURE DI COLLEGAMENTO DELL'ATTUATORE FRENO VEDERE LE SPECIFICHE
640 195 000 0 CILINDRO MAX. TIPO 24

20. DETAILLIERTE INFORMATION ZUR KENNZEICHNUNG SIEHE 640 222 005 0 DOC. CODE 922
DETAILED INFORMATION FOR MARKING SEE 640 222 005 0 DOC. CODE 922

PRODUKT-SPEZIFIKATION 640 195 000 0
PRODUCT-SPECIFICATION 640 195 000 0

DIMENSIONS WITHOUT TOLERANCES ARE GAUGE DIMENSIONS
NICHT TOLERIERTE MASSE = LEHRENMASSE
DIMENSIONS NON TOLERANCEES = CALIBRES
LE DIMENSIONI SENZA TOLLERANZA SONO QUELLE RIFERTITE AL CALIBRO

PAN 19-1

COATING
ANTI-CORROSION PROTECTION - SALT SPRAY TEST MIN. 96 HOURS
BESCHICHTUNG
KORROSIONSSCHUTZ-SALZSPRUEHNEBELPRUEF. MIN. 96 STD.
PROTECTION DE SURFACE
TENUE BS 96 H MIN.
RIVESTIMENTO
PROTEZIONE CONTRO LA CORROSIONE - PROVA DI RESISTENZA ALLA NEBBIA SALINA DOPO ALMENO 96 H

640 195 082 0	D-36698-1R	MIRROR IMAGE SPIEGELBILD IMAGE INVERSEE IMMAGINE RIFLESSA
640 195 081 0	D-36698-1L	AS SHOWN WIE GEZEICHNET COMME DESSINE COME DISEGNATO
IDENT-NO BRAKE MATERIAL-NR. BREMSE REFERENCE FREIN CODICE MATERIALE FRENO	CUSTOMER NO. KUNDENNUMMER NO. DU CLIENT NO. CLIENTE	BRAKE TYPE AUSFUEHRUNG BREMSE VARIANTE DE FREIN VERSIONE FRENO

General Specifications: JED-334-1 , Size 150 144/05 LP
Further Technical Data:
Doc. Code: Sheet: To:
General Tolerances JED-261

Class 1)	Range of Nominal Dimensions [in mm] ≥ 50	> 50 ≤ 180	> 180 ≤ 400	> 400	
Fine	0.5	1.0	1.5	2.0	±3°
Medium	1.0	2.0	3.0	4.0	
Coarse	2.0	3.5	5.0	6.5	

Tapped Holes acc. -
1) Tolerance Class Applied Crossmarked

Copyright WABCO

WABCO

Date	Signature	Drawn	
2020-10-10	Yongming Li		
2020-10-12	Redemann	Checked	Redemann
		Appr.	Redemann

DISC BRAKE PAN-RANGE LIGHT
SCHEIBENBREMSE PAN-REIHE LEICHT
FREIN A DISQUE PAN-TYPE GAMME BASSE
PINZA FRENO A DISCO TIPO PAN LEGGERO

Mass	Scale	Material No.	Date of first issue	
32.475 kg	1 : 1	640 195 081 0	2008-09-19	
Size	CAD System	Doc.Code	Language	Sheet
A 0	CREO		053	ML 1/1

ECN No.	Revision	Techn. Resp.	Replacement for
505022	fx K	6921	-

100mm