SAFETY CHARACTERISTICS	0
SIGNIFICANT CHARACTERISTICS	8
CUSTOMER INTERFACE	0

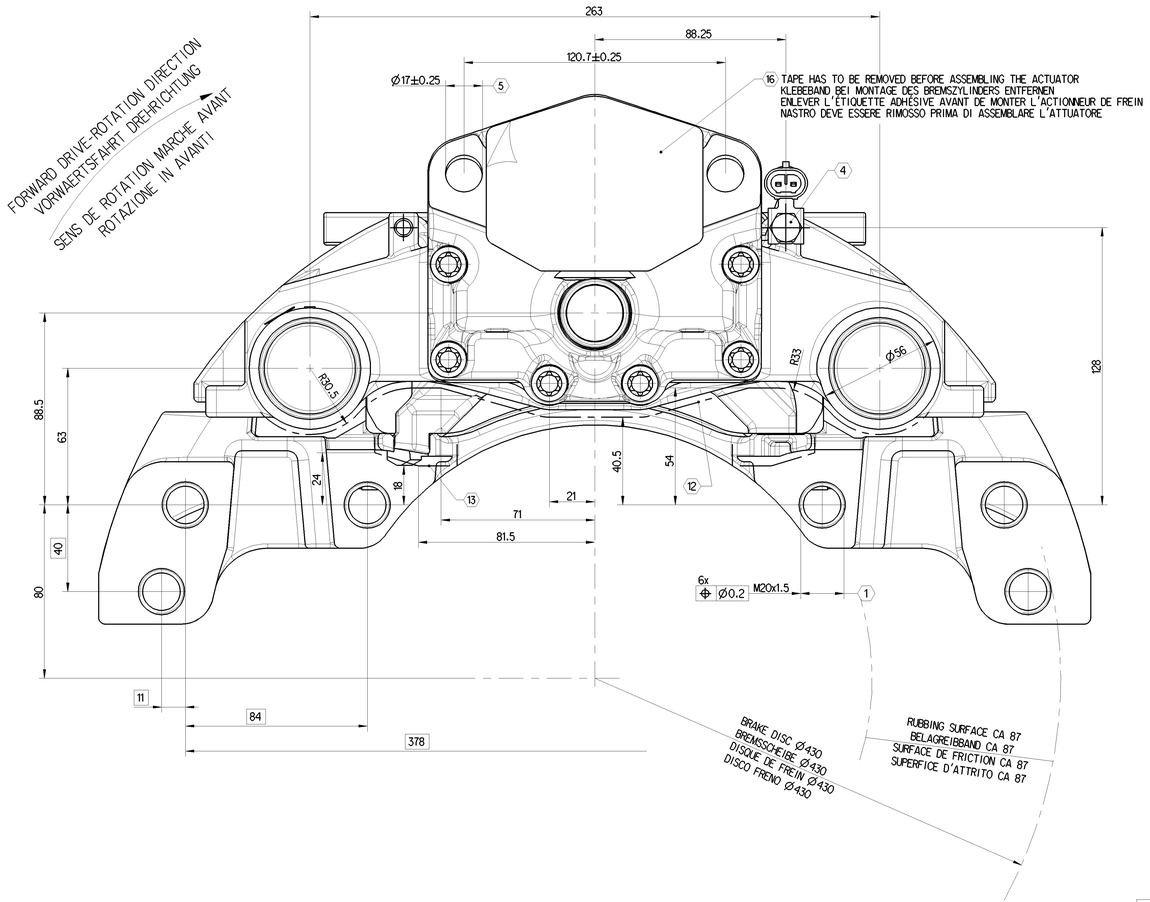

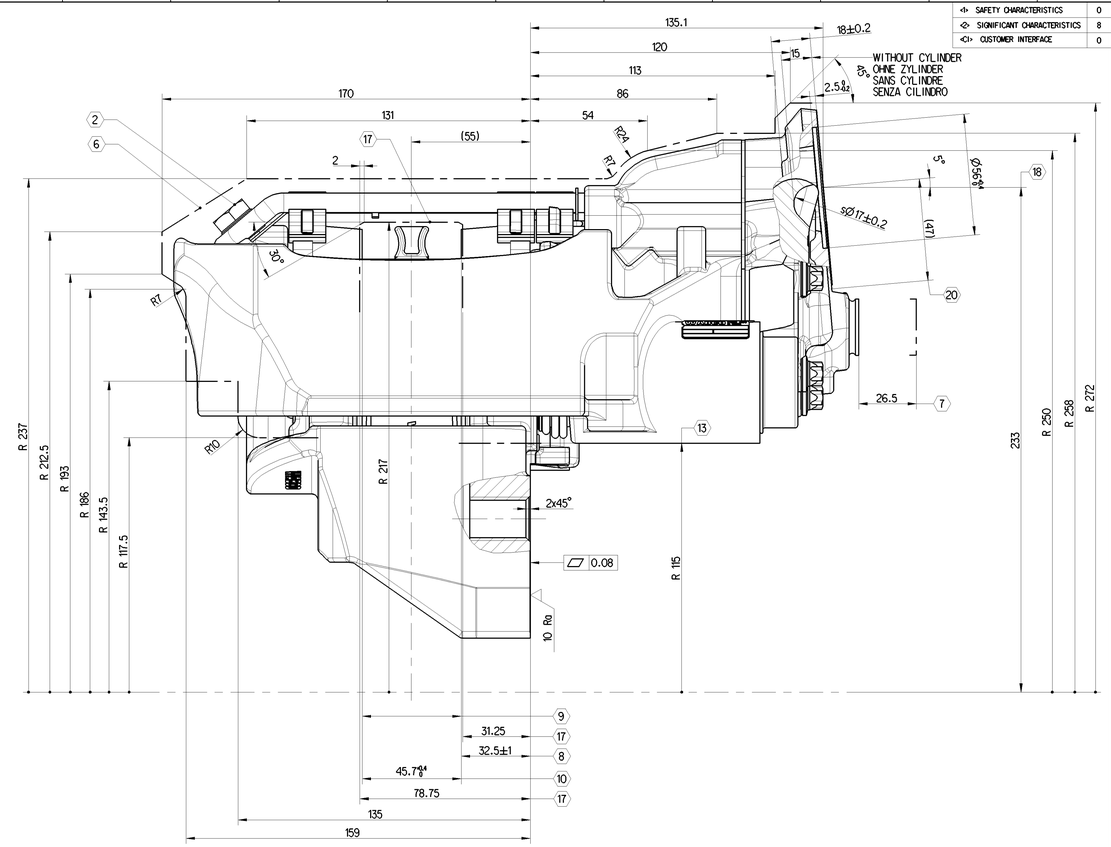

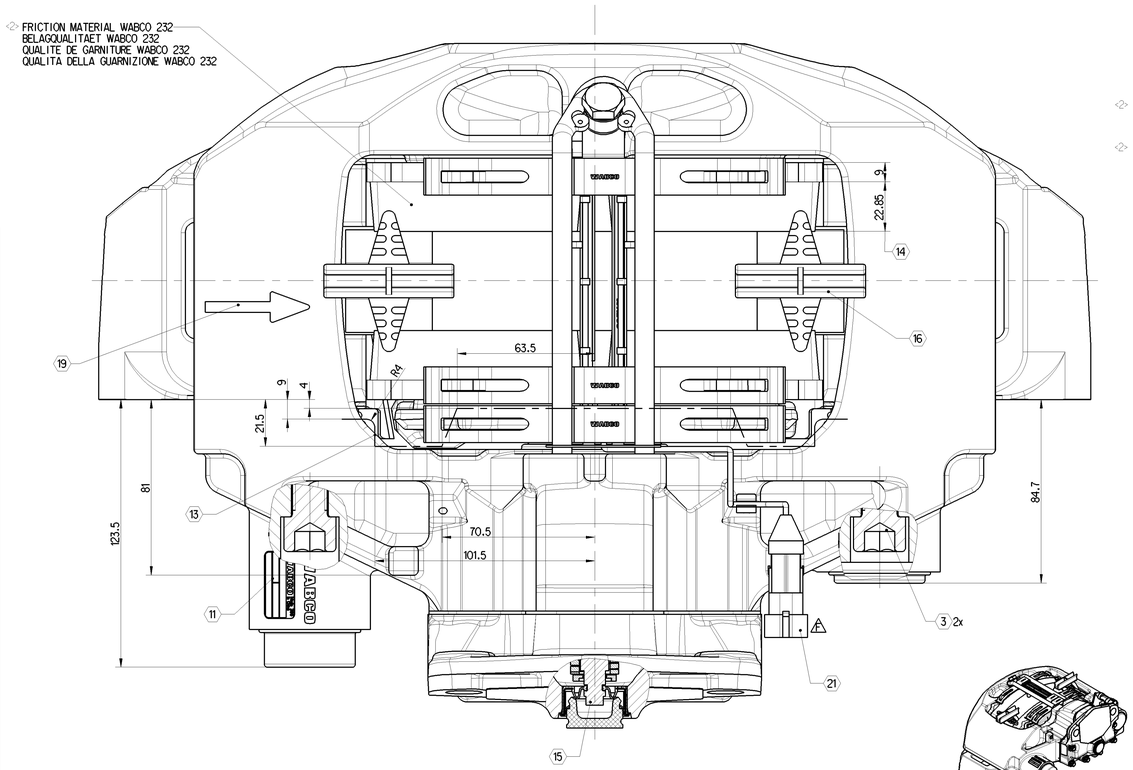

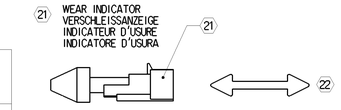

CONNECTOR TYPE AMP 282104-1
STECKER TYP AMP 282104-1
CONNECTEUR TYPE AMP 282104-1
CONNETTORE TIPO AMP 282104-1

22 COUNTERPART: CONNECTOR TYPE AMP 282080-1
(NOT SUPPLIED WITH BRAKE)
GEGENSTUECK: STECKER TYP AMP 282080-1
(NICHT BESTANDTEIL DER BREMSE)
PENDANT: CONNECTEUR TYPE AMP 282080-1
(NON FOURNI AVEC LE FREIN)
OGGETTO DI RISCONTRO: CONNETTORE TIPO AMP 282080-1
(NON FORNITO CON IL FRENO)

	TIGHTENING TORQUE ANZIEHDREHMOMENT COUPLE DE SERRAGE COPPIA DI SERRAGGIO	WIDTH OVER FLATS SW SURPLATS MISURA CHIAVE	NOTE BEMERKUNG REMARQUE ANNOTAZIONE			
1	595 ± 35 Nm (FOR CUSTOMER INFORMATION)	30	BRAKE MOUNTING M20x1.5x ... - 10.9	BREMSENBEFESTIGUNG M20x1.5x ... - 10.9	FIXATION DU FREIN M20x1.5x ... - 10.9	FISSAGGIO FRENO M20x1.5x ... - 10.9
2	30 + 15 Nm	17	PAD HOLD DOWN DEVICE DIN 933 - M10x20 - 8.8 MICROENCAPSULATED	BUEGELBEFESTIGUNG DIN 933 - M10x20 - 8.8 MIKROVERKAPSELT	BARRETTE DE MAINTIEN DIN 933 - M10x20 - 8.8 MICRO ENROBAGE	DISPOSITIVO FISSAGGIO DIN 933 - M10x20 - 8.8 MICRO RIVESTIMENTO
3	340 ± 20 Nm	14	TIGHTENING ORDER 1. LONG BOLT DIN 912-M16x1.5x60-12.9 2. SHORT BOLT	ANZIEHREIHENFOLGE 1. BOLZEN LANG DIN 912-M16x1.5x60-12.9 2. BOLZEN KURZ	ORDRE DE SERRAGE 1. AXE LONG DIN 912-M16x1.5x60-12.9 2. AXE COURT	SEQUENZA DI SERRAGGIO 1. VITI LUNGHE DIN 912-M16x1.5x60-12.9 2. VITI CORTE
4	20 ± 2 Nm	13	WEAR INDICATOR FASTENING ISO 4017 - M8x14 ZINC-PLATED, MICROENCAPSULATED	VERSCHLEISSANZEIGEBEFESTIGUNG ISO 4017 - M8x14 VERZINKT, MIKROVERKAPSELT	FIXATION DE IINDICATEUR D'USURE ISO 4017 - M8x14 ZINGUE, MICRO ENROBAGE	FISSAGGIO INDICATORE D'USURA ISO 4017 - M8x14 ZINCATO, MICRO RIVESTIMENTO
5	210 -30 Nm (FOR CUSTOMER INFORMATION)	24	OPERATION CYLINDER M16x1.5	BETAETIGUNGSZYLINDER M16x1.5	ACTIONNEUR M16x1.5	CILINDRO OPERATORE M16x1.5

6 MAX. STATICAL ROTARY OUTLINE
MAXIMALE STATISCHE ROTATIONSKONTUR
PROFIL ENVELOPPE MAXIMAL STATIQUE
ROTAZIONE PROFILO MASSIMO STATICO

7 MAX. DISPLACEMENT
MAXIMALE VERSCHIEBUNG
DEPLACEMENT MAXIMAL
MAX. MOVIMENTO

8 FITTING DIMENSION OF THE DISC
SCHEIBENEINBAUMASS
DIMENSION DE MONTAGE DU DISQUE
QUOTA FISSAGGIO DISCO

9 BRAKE DISC NEW 45-0.2, WEARABLE UP TO 37
BREMSSCHEIBE NEU 45-0.2, VERSCHLEISSBAR BIS 37
DISQUE NEUF 45-0.2, A USER JUSQU'A 37
DISCO FRENO NUOVO 45-0.2, USURABILE FINO 37

10 ASSEMBLY DIMENSION FOR BRAKE PADS
EINBAUMASS FUER BREMSBELAEGE
DIMENSION DE MONTAGE DES GARNITURES
DIMENSIONE ASSEMBLAGGIO PASTIGLIE FRENO

11 DETAILED INFORMATION FOR MARKING
SEE 640 175 060 0 DOC. CODE 922
DETAILLIERTE INFORMATIONEN ZUR KENNZEICHNUNG
SIEHE 640 175 060 0 DOC. CODE 922

12 ENVELOPE CIRCLE CALIPER WITH COVER
HUELLKURVE BREMSSATTEL MIT DECKEL
ENVELOPPANTE ETRIER AVEC COUVERCLE
INCOMBRO PINZA CON COPERCHIO

13 ENVELOPE CIRCLE CARRIER
HUELLKURVE BREMSENTRAEGER
ENVELOPPANTE SUPPORT
INCOMBRO SUPPORTO

14 REMAINING LINING THICKNESS 2
RESTBELAGSTAERKE 2
EPAISSEUR GARNITURE RESTANTE 2
SPESSORE RESIDUO PASTIGLIA 2

15 HEXAGON WIDTH OVER FLATS 8 mm
SECHSKANT SW 8
TETE HEXAGONALE (SURPLATS 8)
ESAGONO SW 8

16 FOR STORAGE AND SHIPMENT
FUER TRANSPORT UND LAGERUNG
POUR TRANSPORT ET STOCKAGE
PER STOCCAGGIO E TRASPORTO

17 MAXIMUM DISC CLEARANCE
SCHEIBENFREIGANG
COURSE LIBRE DU DISQUE
MAX. DIMENSIONE INSTALLAZIONE DISCO

18 CENTER LINE CYLINDER
MITTE ZYLINDER
AXE MEDIAN ACTIONNEUR
CENTRO CILINDRO

19 FORWARD DRIVE - ROTATION DIRECTION
VORWAERTS DREHRICHTUNG
SENS DE ROTATION MARCHE AVANT
ROTAZIONE IN AVANTI

20 BRAKE ACTUATOR SIZE RESTRICTION SEE PART SPECIFICATION
640 225 000 0 MAX. ACTUATOR TYPE 24
ZYLINDERANSCHLUSSMASSE NACH PART SPEZIFIKATION
640 225 000 0 MAX. ZYLINDER TYP 24
DIMENSION DE CONNEXION DE CYLINDRE DE FREIN PART SPECIFICATION
640 225 000 0 LIMITATION TAILLE DE CYLINDRE, MAX. ACCEPTEE TYPE 24
PER MISURE DI COLLEGAMENTO DELL'ATTUATORE FRENO VEDERE LE SPECIFICHE
640 225 000 0 CILINDRO MAX. TIPO 24

PRODUKT-SPEZIFIKATION 640 225 000 0
PRODUCT-SPECIFICATION 640 225 000 0

DIMENSIONS WITHOUT TOLERANCES ARE GAUGE DIMENSIONS
NICHT TOLERIERTE MASSE = LEHRENMASSE
DIMENSIONS NON TOLERANCES = CALIBRES
LE DIMENSIONI SENZA TOLLERANZA SONO QUELLE RIFERTITE AL CALIBRO

640 225 035 0		MIRROR IMAGE SPIEGELBILD IMAGE INVERSEE IMMAGINE RIFLESSA
640 225 034 0		AS SHOWN WIE GEZEIGNET COMME DESSINE COME DISEGNATO
IDENT-NO BRAKE MATERIAL-NR. BREMSE REFERENCE FREIN CODICE MATERIALE FRENO	CUSTOMER NO. KUNDENNUMMER NO. DU CLIENT NO. CLIENTE	BRAKE TYPE AUSFUEHRUNG BREMSE VARIANTE DE FREIN VERSIONE FRENO

PAN 22-1

COATING
ANTI-CORROSION PROTECTION - SALT SPRAY TEST MIN. 96 HOURS
BESCHICHTUNG
KORROSIONSSCHUTZ-SALZSPRUEHNEBELPRUEF. MIN. 96 STD.
PROTECTION DE SURFACE
TENUE BS 96 H MIN.
RIVESTIMENTO
PROTEZIONE CONTRO LA CORROSIONE - PROVA DI RESISTENZA ALLA NEBBIA SALINA DOPO ALMENO 96 H

General Specification: JED-334-1 , Size ISO 14405 LP
Further Technical Data:
Doc. Code: Sheet: To

General Tolerances JED-261

Class 1)	Range of Nominal Dimensions (in mm) ≤ 50	> 50 ≤ 180	> 180 ≤ 400	> 400	
Fine	0.5	1.0	1.5	2.0	±3°
Medium X	1.0	2.0	3.0	4.0	
Coarse	2.0	3.5	5.0	6.5	

Tapped Holes acc.
1) Tolerance Class Applied Crossmarked

Copyright WABCO®

Date	Drawn	Signature
2022-07-18	Nainor	
2022-08-10	Redemann	

Expert: Redemann

WABCO

DISC BRAKE PAN-RANGE LIGHT
SCHEIBENBREMSE PAN-REIHE LEICHT
FREIN A DISQUE PAN-TYPE GAMME BASSE
PINZA FRENO A DISCO TIPO PAN LEGGERO

Mass	Scale	Material No.	Date of first issue	
35.888 kg	1 : 1	640 225 034 0	2012-09-17	
Size A 0	CAD System CREO		Doc.Code 053	Language ML
			Sheet 1/1	

CD-No. 505014 | Revision tx F | Techn. Prep. 6921 | Replacement for -

Diese Unterlagen bleiben unser Eigentum. Jede Verwendung oder Mitteilung ihres Inhalts ist ohne unsere vorherige schriftliche Zustimmung verboten. Zuwiderhandlungen verpflichten zu Schadenersatz. Wir behalten uns das Recht, insbesondere das Patentrecht, Gebrauchsmusterrecht und Geschmacksmusterrecht, vorbehalten.
This information remains our property. Any use or disclosure of its contents without our prior written consent is not permitted. Violations will be liable for damages. We reserve all rights, in particular those of patent, utility model and design protection.
Ce document est notre propriété. Toute utilisation ou communication de son contenu sans notre accord écrit est interdite. Les contrevenants seront tenus à des dommages-intérêts. Nous nous réservons tous droits, en particulier ceux de brevet, de modèle d'utilité et de dessin ou modèle.
Questo documento è di nostra proprietà. Qualsiasi uso o comunicazione del suo contenuto senza il nostro consenso scritto è vietato. Le infrazioni comportano il dovuto risarcimento di danni. Ci riserviamo tutti i diritti, in particolare quelli di brevetto, di modello di utilità e di disegno o modello.