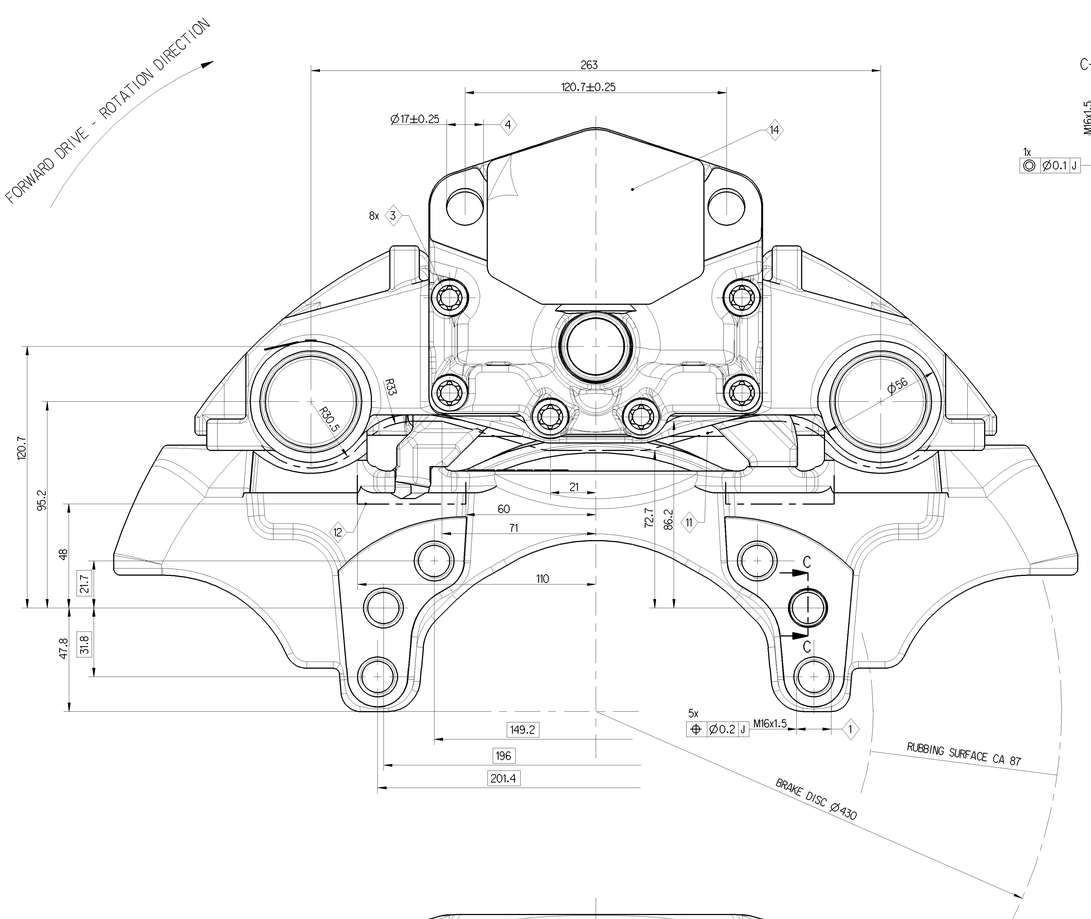

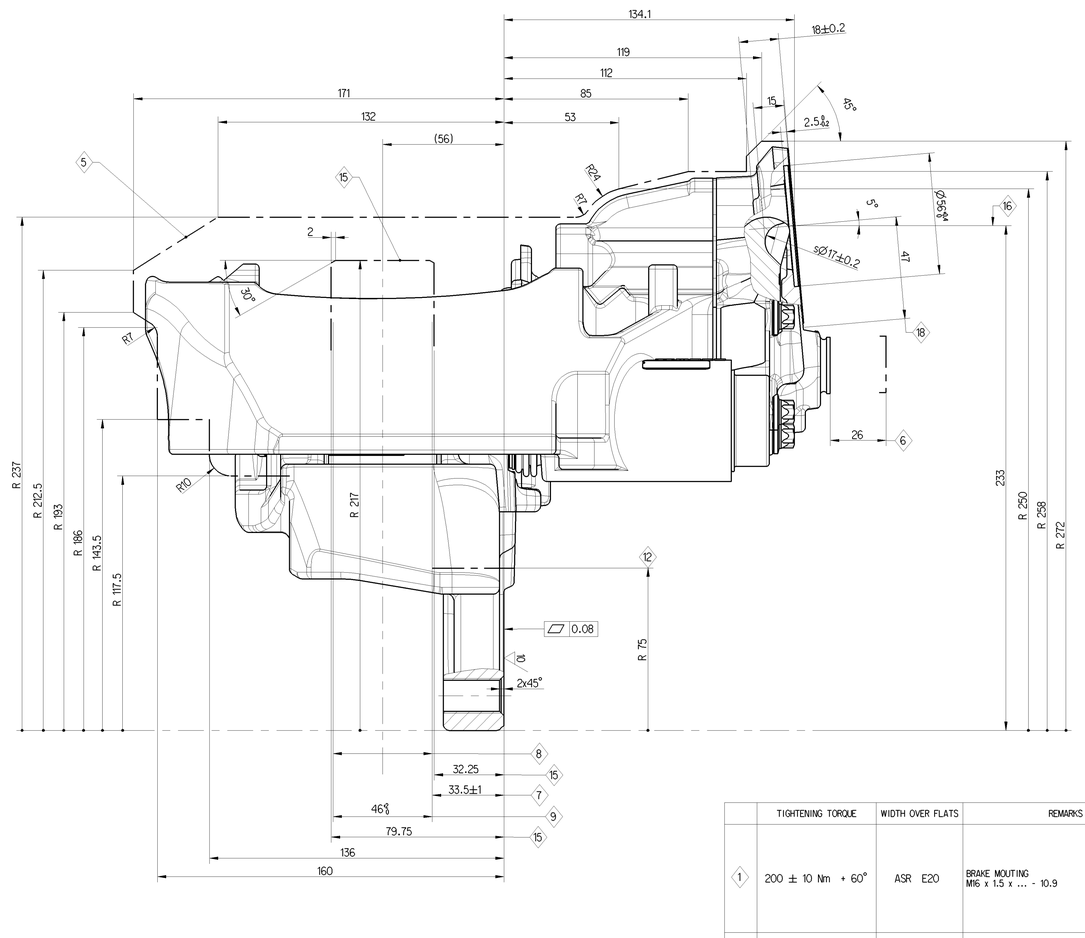

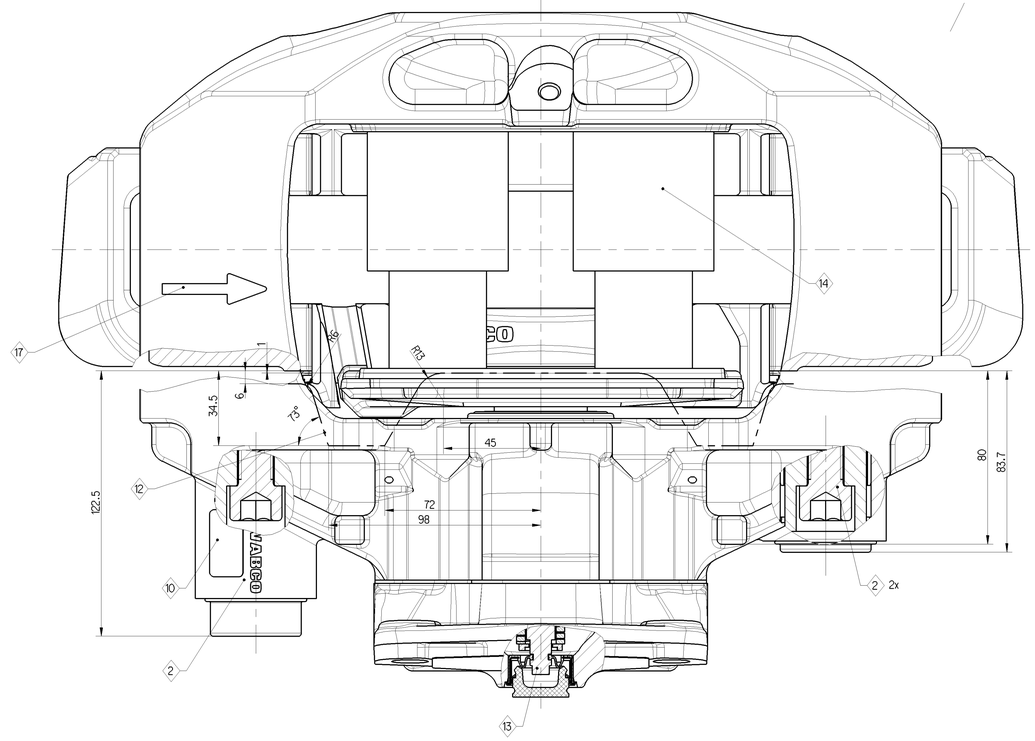

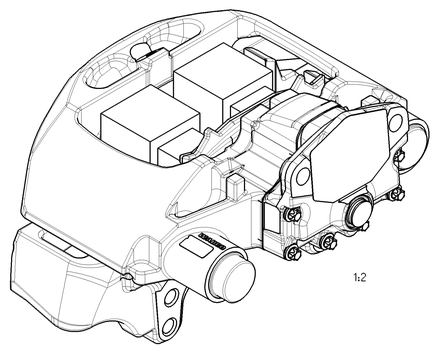

	TIGHTENING TORQUE	WIDTH OVER FLATS	REMARKS
1	200 ± 10 Nm + 60°	ASR E20	BRAKE MOUTING M16 x 1.5 x ... - 10.9
2	340 ± 20 Nm	14	TIGHTENING ORDER (DIN 912-M16x1.5x80-12.9) 1. LONG BOLT 2. SHORT BOLT
3	68 ± 5 Nm	E12	COVER FIXING DIN 34800 - M10x1x40 - 12.9
4	210 -30 Nm	24	OPERATION CYLINDER M16x1.5
5	MAX. ROTATORY OUTLINE		
6	MAX. DISPLACEMENT		
7	FITTING DIMENSION OF THE DISC		
8	BRAKE DISC NEW 45-0.2, WEARABLE TO UP 37		
9	ASSEMBLY DIMENSION FOR BRAKE PADS		
10	CUSTOMER'S LABEL		
11	ENVELOPE CIRCLE CALIPER WITH COVER		
12	ENVELOPE CIRCLE CARRIER		
13	HEXAGON WIDTH OVER FLATS 8 mm		
14	FOR STORAGE AND SHIPMENT		
15	MAXIMUM DISC CLEARANCE		
16	CENTER LINE CYLINDER		
17	FORWARD DRIVE - ROTATION DIRECTION		
18	BRAKE ACTUATOR SIZE RESTRICTION SEE PART SPECIFICATION 640 225 007 0 MAX. TYPE 24		

DIMENSIONS WITHOUT TOLERANCES ARE GUAGE DIMENSIONS

PRODUCT - SPECIFICATION 640 225 007 0

COATING: ANTI-CORROSION PROTECTION - SALT SPRAY TEST MIN.96 HOURS

PAN 22-1

ID NUMBER	BREAK TYPE
640 225 041 A	MIRROR IMAGE
640 225 040 A	AS SHOWN

General Specification: JED-334-1
Further Technical Data: 640 195 001 0
Doc. Code: 435 | Sheet: 1 To 9

General Tolerances JED-261

Class 1)	Range of Nominal Dimensions (± mm) ≤ 50	> 50 ≤ 180	> 180 ≤ 400	> 400	
Fine	0.5	1.0	1.5	2.0	±3°
Medium X	1.0	2.0	3.0	4.0	
Coarse	2.0	3.5	5.0	6.5	

Tapped Holes acc.
1) Tolerance Class Applied Crossmarked

Copyright WABCO®

Date	Signature
Drawn 2016-11-16	Mucha
Checked 2016-11-16	Slobodzian
Expert Redemann	

WABCO

DISC BRAKE PAN - RANGE LIGHT

Mass	Scale	Material No.	Date of first issue: 2016-11-16
32.393 kG	1:1	640 225 040 A	Doc.Code 053 · Language EN · Sheet 1/1
Size A 0	CAD System CREO	ECN-No. - · Revision - · Techn. Resp. 2021	Replacement for -

100mm