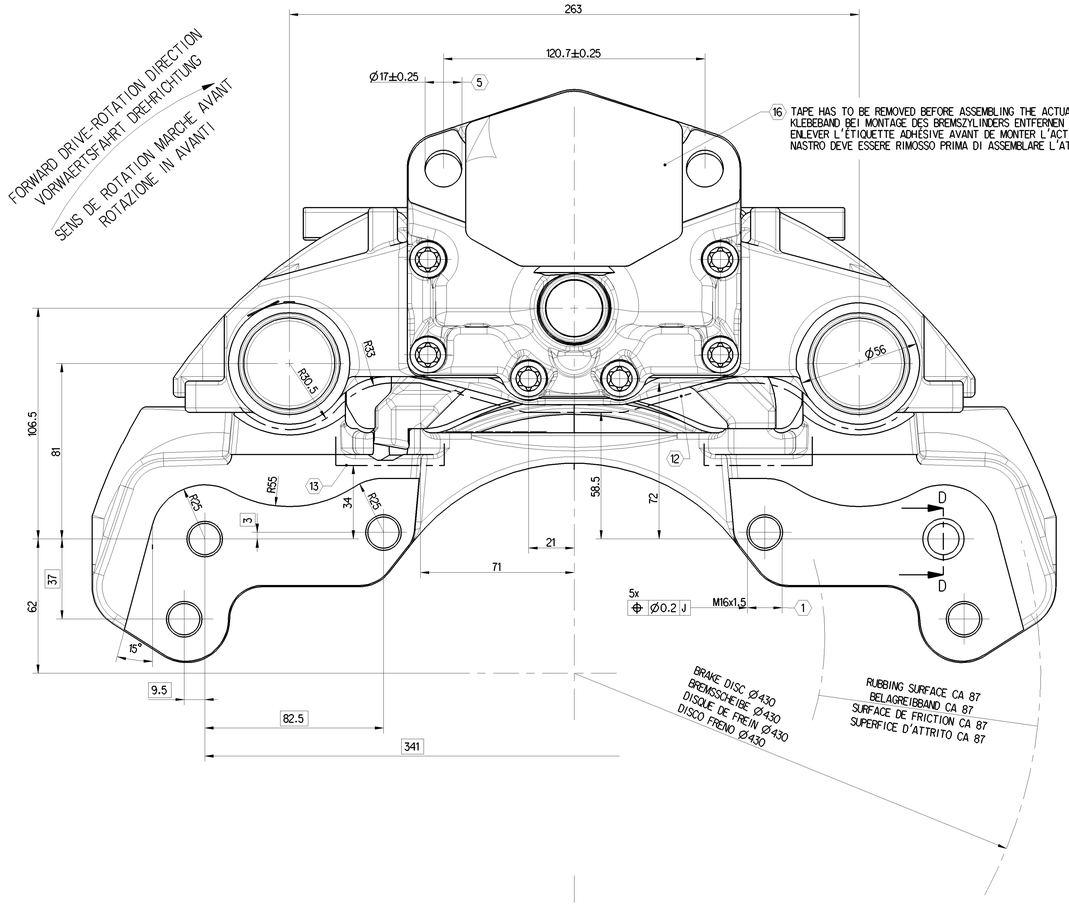

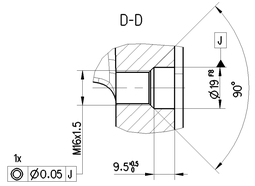

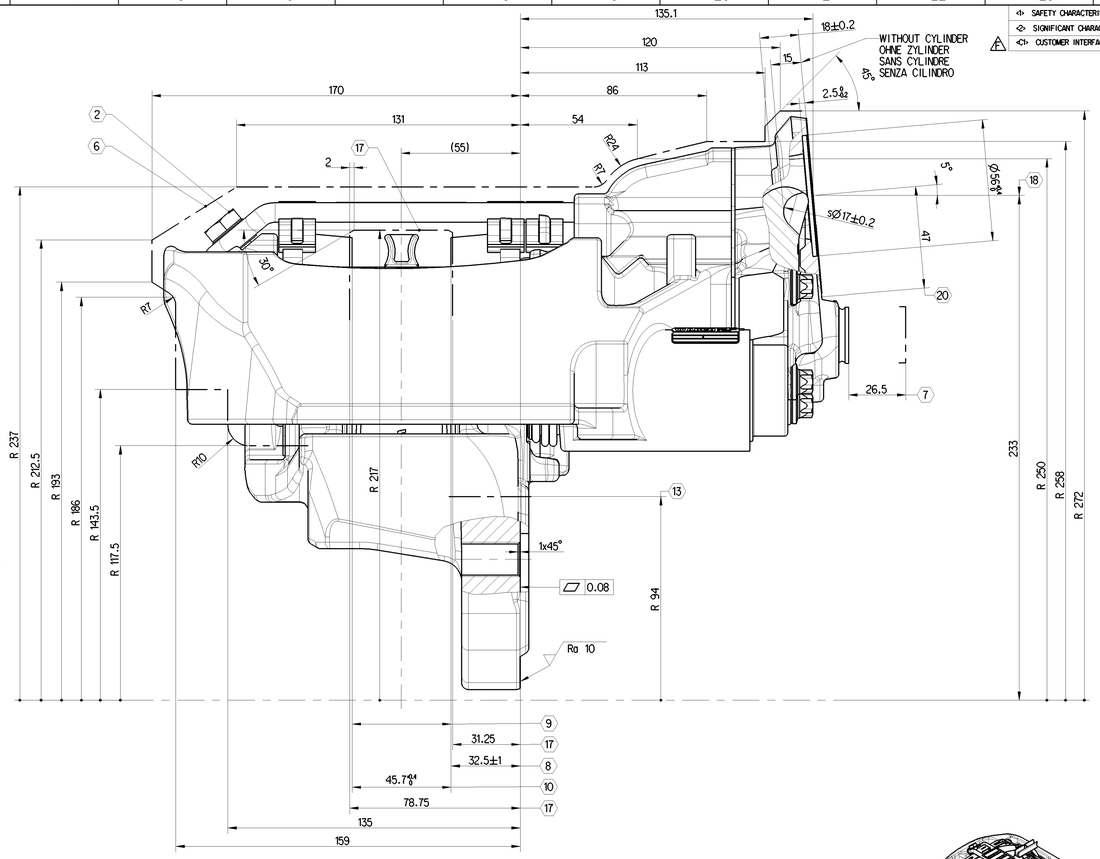

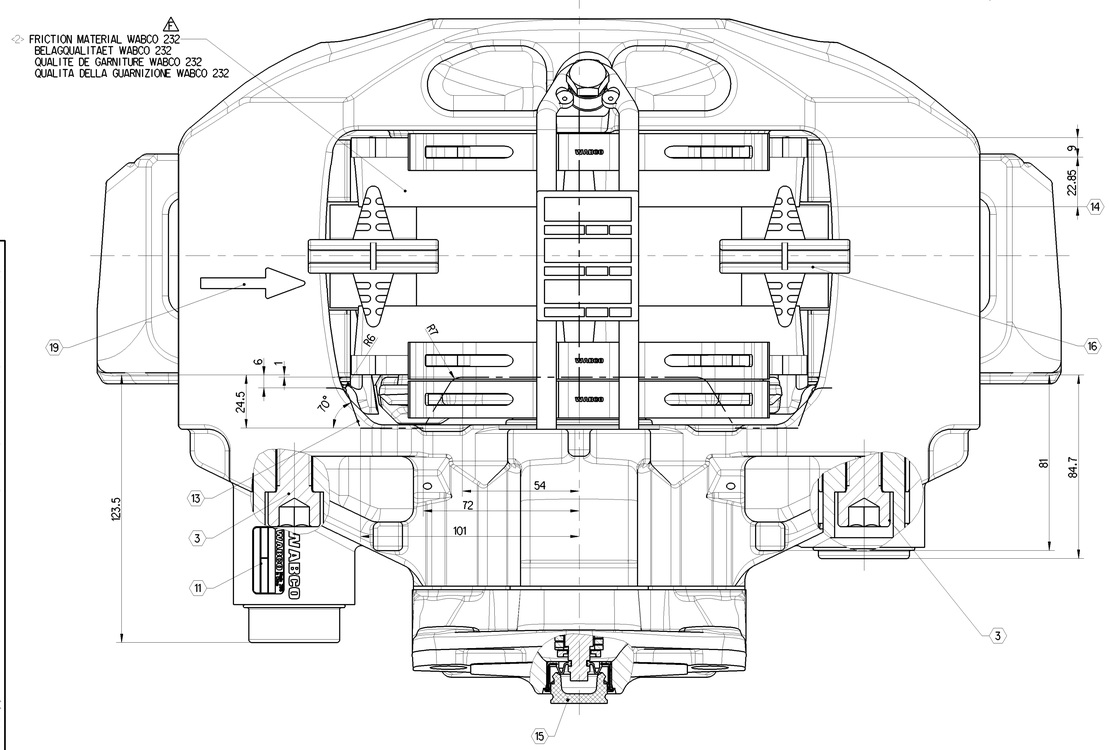

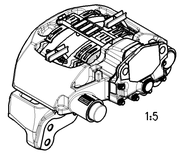

	TIGHTENING TORQUE ANZIEHDREHMOMENT COUPLE DE SERRAGE COPPIA DI SERRAGGIO	WIDTH OVER FLATS SW SURPLATS MISURA CHIAVE	NOTE BEMERKUNG REMARQUE ANNOTAZIONE			
<2> 1	290 ± 20 Nm	24 DIN 961 23 ISO 8676	BRAKE MOUNTING M16 x 1.5 x ... - 10.9	BREMSENBEFESTIGUNG M16 x 1.5 x ... - 10.9	FIXATION DU FREIN M16 x 1.5 x ... - 10.9	FISSAGGIO FRENO M16 x 1.5 x ... - 10.9
<2> 2	30 + 15 Nm	17	PAD HOLD DOWN DEVICE DIN 933 - M10x20 - 8.8 MICROENCAPSULATED	BUEGELBEFESTIGUNG DIN 933 - M10x20 - 8.8 MIKROVERKAPSELT	BARRETTE DE MAINTIEN DIN 933 - M10x20 - 8.8 MICRO ENROBAGE	DISPOSITIVO FISSAGGIO DIN 933 - M10x20 - 8.8 MICRO RIVESTIMENTO
<2> 3	340 ± 20 Nm	14	TIGHTENING ORDER 1. LONG BOLT DIN 912-M16x1.5x60-12.9 2. SHORT BOLT	ANZIEHREIHENFOLGE 1. BOLZEN LANG DIN 912-M16x1.5x60-12.9 2. BOLZEN KURZ	ORDRE DE SERRAGE 1. AXE LONG DIN 912-M16x1.5x60-12.9 2. AXE COURT	SEQUENZA DI SERRAGGIO 1. VITI LUNGHE DIN 912-M16x1.5x60-12.9 2. VITI CORTE
4	-	-	-	-	-	-
<2> 5	210 -30 Nm	24	OPERATION CYLINDER M16x1.5	BETAETIGUNGSZYLINDER M16x1.5	ACTIONNEUR M16x1.5	CILINDRO OPERATORE M16x1.5

<2> 6 MAX. STATICAL ROTARY OUTLINE
MAXIMALE STATISCHE ROTATIONSKONTUR
PROFIL ENVELOPPE MAXIMAL STATIQUE
ROTAZIONE PROFILO MASSIMO STATICO

<2> 7 MAX. DISPLACEMENT
MAXIMALE VERSCHIEBUNG
DEPLACEMENT MAXIMAL
MAX. MOVIMENTO

8 FITTING DIMENSION OF THE DISC
SCHEIBENEINBAUMASS
DIMENSION DE MONTAGE DU DISQUE
QUOTA FISSAGGIO DISCO

9 BRAKE DISC NEW 45-0.2, WEARABLE UP TO 37
BREMSSCHEIBE NEU 45-0.2, VERSCHLEISSBAR BIS 37
DISQUE NEUF 45-0.2, A USER JUSQU'A 37
DISCO FRENO NUOVO 45-0.2, USURABILE FINO 37

<2> 10 ASSEMBLY DIMENSION FOR BRAKE PADS
EINBAUMASS FUER BREMSBELAEGE
DIMENSION DE MONTAGE DES GARNITURES
DIMENSIONE ASSEMBLAGGIO PASTIGLIE FRENO

11 DETAILLIERTE INFORMATIONEN ZUR KENNZEICHNUNG SIEHE 640 175 060 0 DOC. CODE 922
DETAILED INFORMATION FOR MARKING SEE 640 175 060 0 DOC. CODE 922

12 ENVELOPE CIRCLE CALIPER WITH COVER
HUELLKURVE BREMSSATTEL MIT DECKEL
ENVELOPPANTE ETRIER AVEC COUVERCLE
INCOMBRO PINZA CON COPERCHIO

13 ENVELOPE CIRCLE CARRIER
HUELLKURVE BREMSENTRAEGER
ENVELOPPANTE SUPPORT
INCOMBRO SUPPORTO

14 REMAINING LINING THICKNESS 2
RESTBELAGSTAERKE 2
EPAISSEUR GARNITURE RESTANTE 2
SPESSORE RESIDUO PASTIGLIA 2

15 HEXAGON WIDTH OVER FLATS 8 mm
SECHSKANT SW 8
TETE HEXAGONALE (SURPLATS 8)
ESAGONO SW 8

16 FOR STORAGE AND SHIPMENT
FUER TRANSPORT UND LAGERUNG
POUR TRANSPORT ET STOCKAGE
PER STOCCAGGIO E TRASPORTO

<2> 17 MAXIMUM DISC CLEARANCE
SCHEIBENFREIGANG
COURSE LIBRE DU DISQUE
MAX. DIMENSIONE INSTALLAZIONE DISCO

18 CENTER LINE CYLINDER
MITTE ZYLINDER
AXE MEDIAN ACTIONNEUR
CENTRO CILINDRO

<2> 19 FORWARD DRIVE - ROTATION DIRECTION
VORWAERTS DREHRICHTUNG
SENS DE ROTATION MARCHE AVANT
ROTAZIONE IN AVANTI

20 BRAKE ACTUATOR SIZE RESTRICTION SEE PART SPECIFICATION
640 225 000 0 MAX. ACTUATOR TYPE 24
ZYLINDERANSCHLUSSMASSE NACH PART SPEZIFIKATION
640 225 000 0 MAX. ZYLINDER TYP 24
DIMENSION DE CONNEXION DE CYLINDRE DE FREIN PART SPECIFICATION
640 225 000 0 LIMITATION TAILLE DE CYLINDRE, MAX. ACCEPTEE TYPE 24
PER MISURE DI COLLEGAMENTO DELL'ATTUATORE FRENO VEDERE LE SPECIFICHE
640 225 000 0 CILINDRO MAX. TIPO 24

PRODUKT-SPEZIFIKATION 640 225 000 0
PRODUCT-SPECIFICATION 640 225 000 0

DIMENSIONS WITHOUT TOLERANCES ARE GAUGE DIMENSIONS
NICHT TOLERIERTE MASSE = LEHRENMASSE
DIMENSIONS NON TOLERANCEES = CALIBRES
LE DIMENSIONI SENZA TOLLERANZA SONO QUELLE RIFERTITE AL CALIBRO

640 225 057 0		MIRROR IMAGE SPIEGELBILD IMAGE INVERSEE IMMAGINE RIFLESSA
640 225 056 0		AS SHOWN WIE GEZEICHNET COMME DESSINE COME DISEGNATO
IDENT-NO BRAKE MATERIAL-NR. BREMSE REFERENCE FREIN CODICE MATERIALE FRENO	CUSTOMER NO. KUNDENNUMER NO. DU CLIENT NO. CLIENTE	BRAKE TYPE AUSFUEHRUNG BREMSE VARIANTE DE FREIN VERSIONE FRENO

PAN 22-1

COATING
ANTI-CORROSION PROTECTION - SALT SPRAY TEST MIN. 96 HOURS
BESCHICHTUNG
KORROSIONSSCHUTZ-SALZSPRUEHNEBELPRUEF. MIN. 96 STD.
PROTECTION DE SURFACE
TENUE 96 H MIN.
RIVESTIMENTO
PROTEZIONE CONTRO LA CORROSIONE - PROVA DI RESISTENZA ALLA NEBBIA SALINA DOPO ALMENO 96 H

General Specification: ISO 8015, JED-334-1, Size ISO 14405 LP
Further Technical Data:
Doc. Code: | Sheet: | To:
General Tolerances JED-261

Class 1)	Range of nominal dimensions in mm: ≤ 50	> 50 ≤ 180	> 180 ≤ 400	> 400	∡
Fine	±0.5	±1	±1.5	±2	
Medium X	±1	±2	±3	±4	±3°
Coarse	±2	±3.5	±5	±6.5	

Tapped Holes acc. -
1) Tolerance Class Applied Crossmarked

Copyright WABCO®

Date	Signature
Drawn 2022-06-01	Lan
Checked 2022-06-09	Redermann

Dimensions in mm

Mass	Scale
37.042 kg	1 : 1
Size	CAD System
A 0	CREO

WABCO

DISC BRAKE PAN-RANGE LIGHT
SCHEIBENBREMSE PAN-REIHE LEICHT
FREIN A DISQUE PAN-TYPE GAMME BASSE
PINZA FRENO A DISCO TIPO PAN LEGGERO

Material No.: 640 225 056 0
Doc.Code: 053 | Language: ML | Sheet: 1/1
Date of first issue: 2009-09-01
Replacement for: -
DCN No.: 510923 | Revision: 2x F | Techn. Prep.: 6921
100mm