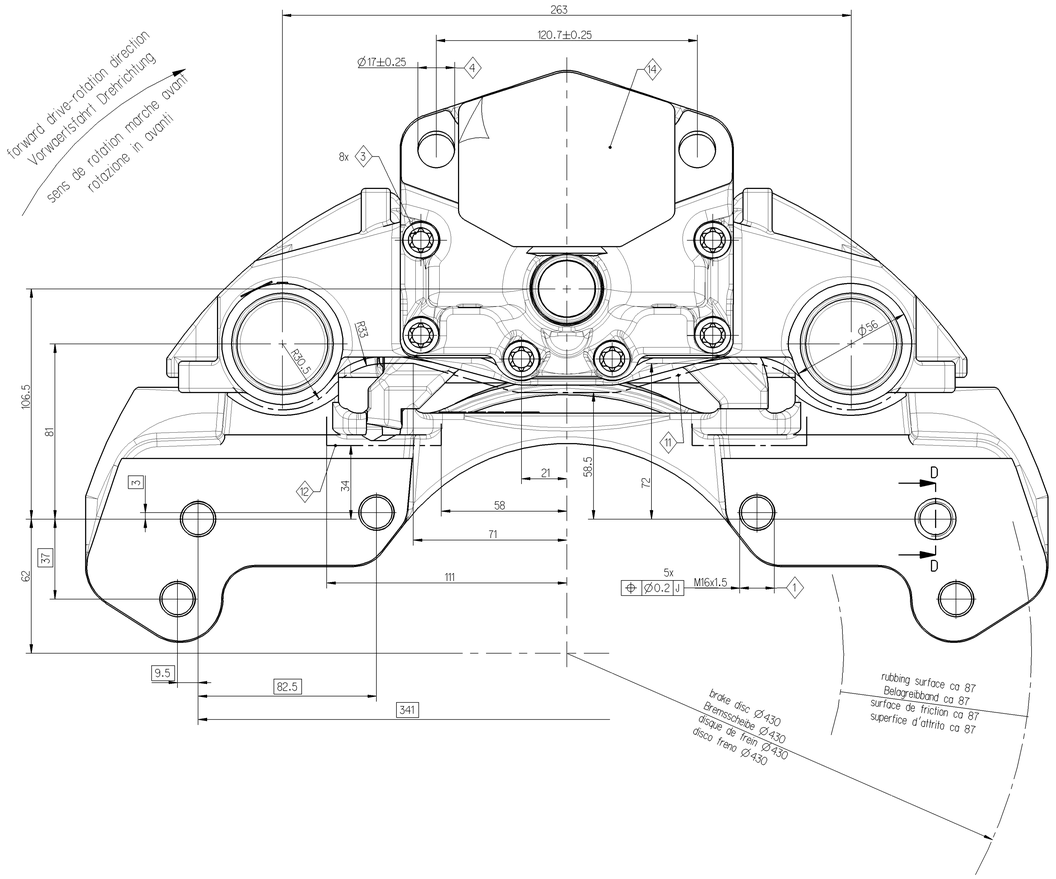

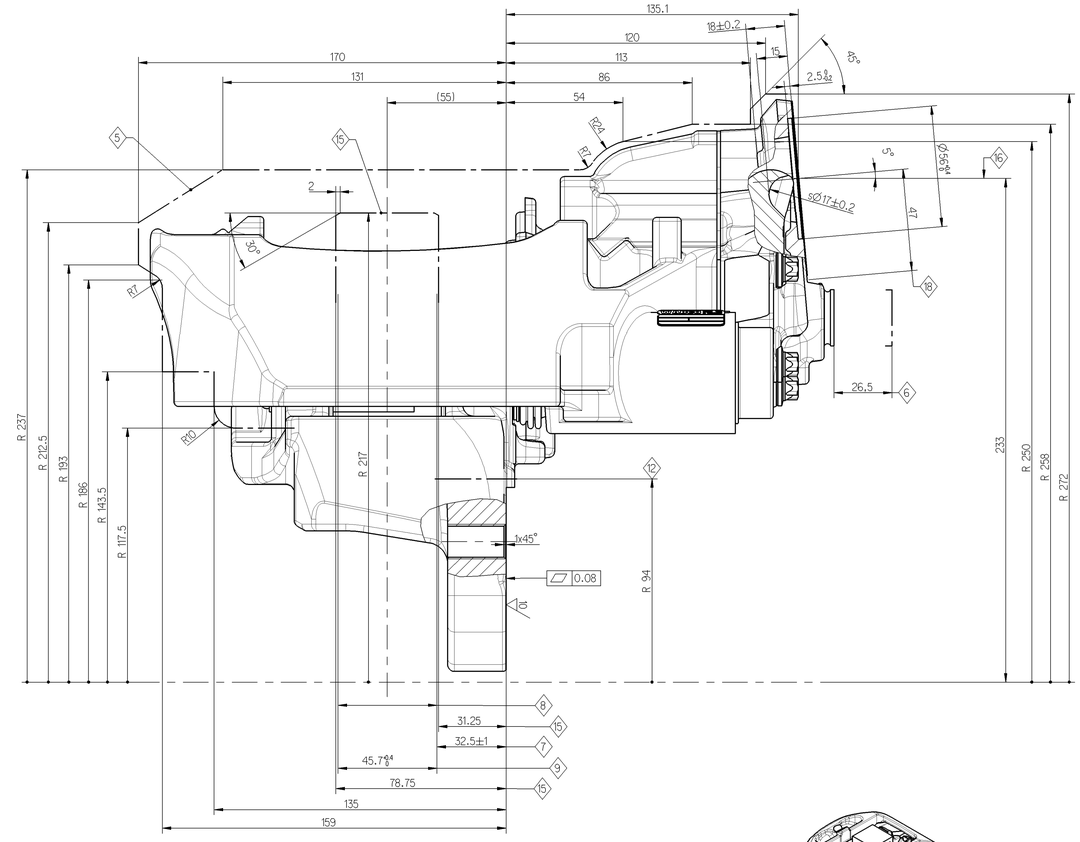

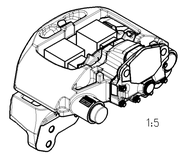

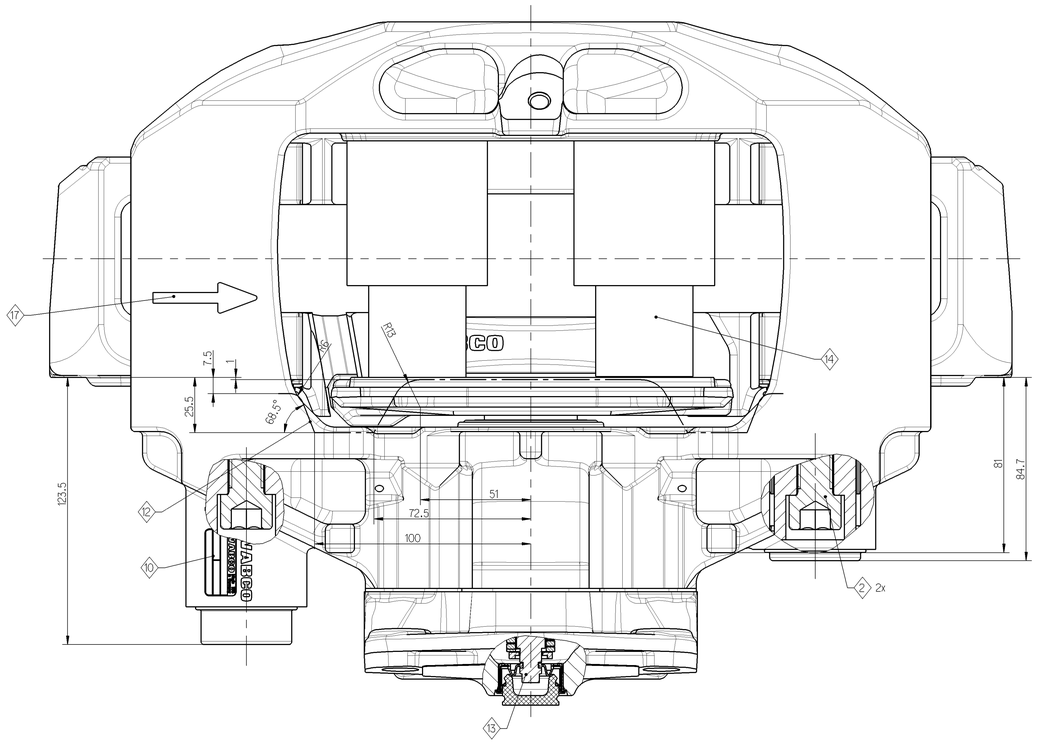

	tightening torque Anziehdrehmoment couple de serrage coppia di serraggio	width over flats SW surplats misura chiave	note Bemerkung remarque annotazione			
1	290 ± 20 Nm	24 DIN 961 23 ISO 8676	brake mounting M16 x 1.5 x ... - 10.9	Bremsenbefestigung M16 x 1.5 x ... - 10.9	fixation du frein M16 x 1.5 x ... - 10.9	fissaggio freno M16 x 1.5 x ... - 10.9
© 2	340 ± 20 Nm	14	tightening order 1. long bolt DIN 912-M16x1.5x80-12.9 2. short bolt	Anziehreihenfolge 1. Bolzen lang DIN 912-M16x1.5x80-12.9 2. Bolzen kurz	ordre de serrage 1. axe long DIN 912-M16x1.5x80-12.9 2. axe court	sequenza di serraggio 1. viti lunghe DIN 912-M16x1.5x80-12.9 2. viti corte
3	68 ± 5 Nm	E 12	cover fixing DIN 34800 - M10x1x40-12.9	Deckelbefestigung DIN 34800 - M10x1x40-12.9	fixation couvercle DIN 34800 - M10x1x40-12.9	fissaggio coperchio DIN 34800 - M10x1x40-12.9
4	210 -30 Nm	24	operation cylinder M16x1.5	Betaetigungszylinder M16x1.5	actionneur M16x1.5	cilindro operatore M16x1.5

5. max. rotary outline
maximale Rotationskontur
profil enveloppe maximal
rotazione profilo massimo

6. max. displacement
maximale Verschiebung
deplacement maximal
max. movimento

7. fitting dimension of the disc
Scheibeneinbaumass
dimension de montage du disque
quota fissaggio disco

8. brake disc new 45-0.2, wearable up to 37
Bremsscheibe neu 45-0.2, verschleissbar bis 37
disque neuf 45-0.2, a user jusqu'a 37
disco freno nuovo 45-0.2, usurabile fino 37

9. assembly dimension for brake pads
Einbaumass fuer Bremsbelaege
dimension de montage des garnitures
dimensione assemblaggio pastiglie freno

10. product identification WABCO
Kennzeichnung WABCO
identification WABCO
identificazione prodotto WABCO

11. envelope circle caliper with cover
Huellkurve Bremssattel mit Deckel
enveloppante etrier avec couvercle
incombro pinza con coperchio

12. envelope circle carrier
Huellkurve Bremsentraeger
enveloppante support
incombro supporto

13. hexagon width over flats 8 mm
Sechskant SW 8
tete hexagonale (surplats 8)
esagono SW 8

14. for storage and shipment
fuer Transport und Lagerung
pour transport et stockage
per stoccaggio e trasporto

15. maximum disc clearance
Scheibenfreigang
course libre du disque
max. dimensione installazione disco

16. center line cylinder
Mitte Zylinder
axe median actionneur
centro cilindro

17. forward drive - rotation direction
Vorwaerts Drehrichtung
sens de rotation marche avant
rotazione in avanti

18. brake actuator size restriction see part specification
640 225 007 0 max. actuator type 24
Zylinderanschlussmasse nach Part Spezifikation
640 225 007 0 max. Zylinder Typ 24
dimension de connexion de cylindre de frein part specification
640 225 007 0 limitation taille de cylindre, max. acceptee type 24
per misure di collegamento dell'attuatore freno vedere le specifiche
640 225 007 0 cilindro max. tipo 24

WABCO 2) 1) 3)

1) customer no.
Kundennummer
no. du client
no. cliente

2) date of manufacturing
Herstelldatum
date de fabrication
data fabbricazione

3) WABCO ident number
WABCO-Ident-Nr.
reference WABCO
numero identificativo WABCO

Produkt-Spezifikation 640 225 007 0
product-specification 640 225 007 0

dimensions without tolerances are gauge dimensions
nicht tolerierte Masse = Lehrenmasse
dimensions non tolerances + calibres
le dimensioni senza tolleranza sono quelle riferite al calibro

640 225 063 0		mirror image Spiegelbild image inversee immagine riflessa
640 225 062 0		as shown wie gezeichnet comme dessine come disegnato
ident-no brake Material-Nr. Bremse reference frein codice materiale freno	customer no. Kundennummer no. du client no. cliente	brake type Ausfuehrung Bremse variante de frein versione freno

PAN 22-1

coating
anti-corrosion protection - salt spray test min. 96 hours
Beschichtung
Korrosionsschutz-Salzsprueheneblpruef. min. 96 Std.
protection de surface
tenue BS 96 h min.
rivestimento
protezione contro la corrosione - prova di resistenza alla nebbia salina dopo almeno 96 h

General Specification: JED-334-0
Further Technical Data
Doc. Code: Sheet: To

General Tolerances JED-261

Class 11	Range of Nominal Dimensions (in mm) ≤ 50	> 50 ≤ 180	> 180 ≤ 400	> 400	∡
Fine	0.5	1.0	1.5	2.0	±30'
Medium	1.0	2.0	3.0	4.0	
Coarse	2.0	3.5	5.0	6.5	

Tapped Holes acc.
11 Tolerance Class Applied Crossmarked

Copyright WABCO®

Date	Signature	
Drawn 2013-01-31	Back	
Checked 2013-02-18	Riedemann	
Expert Riedemann		
Mass 32.403 KG	Scale 1 : 1	Material No. 640 225 062 0
Size A 0	CAD System Pro/E	

WABCO

Disc brake PAN-range light
Scheibenbremse PAN-Reihe leicht
Frein a disque PAN-type gamme basse
Pinza freno a disco tipo PAN leggero

Date of first issue: 2009-09-25

Doc.-Code	Language	Sheet
053	ML	1/1

ECN-No. 160145 | Revision Ix C | Techn. Resp. 6921 | Replacement for

100mm

Die Weitergabe sowie die Vervielfältigung dieser Unterlage, Verwertung und Mitteilung ihres Inhalts sind untersagt soweit nicht ausdrücklich zugestanden. Zuwiderhandlungen verpflichten zu Schadenersatz. Alle Rechte vorbehalten, insbesondere für den Fall der Patenterteilung oder GM-Eintragung.
Copying of this document, and giving it to others and the use or communication of the contents thereof, are forbidden without express authority. Offenders are liable to the payment of damages. All rights are reserved in the event of the grant of a patent or the registration of a utility model or design.
Ce document ne doit pas être reproduit ni remis à des tiers ni utilisé pour un usage différent de celui pour lequel il a été remis. Tous droits réservés en cas de délivrance d'un brevet ou d'enregistrement d'un modèle d'utilité ou d'un dessin ou modèle.
Copiare, o far copiare, o far vedere a terzi o comunque rendere noto il contenuto di questo documento è vietato. Tutti i diritti sono riservati in caso di rilascio di brevetto o di registrazione di un modello di utilità o di un disegno o di un modello.