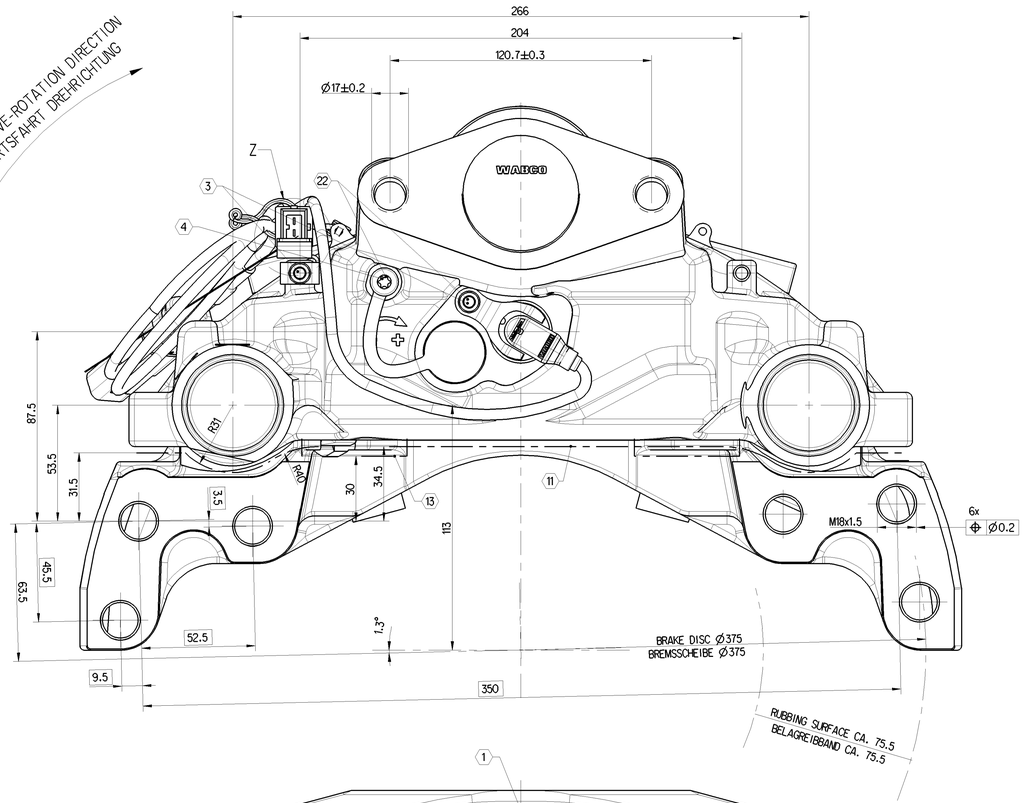

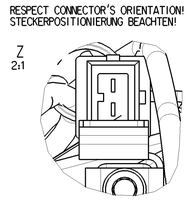

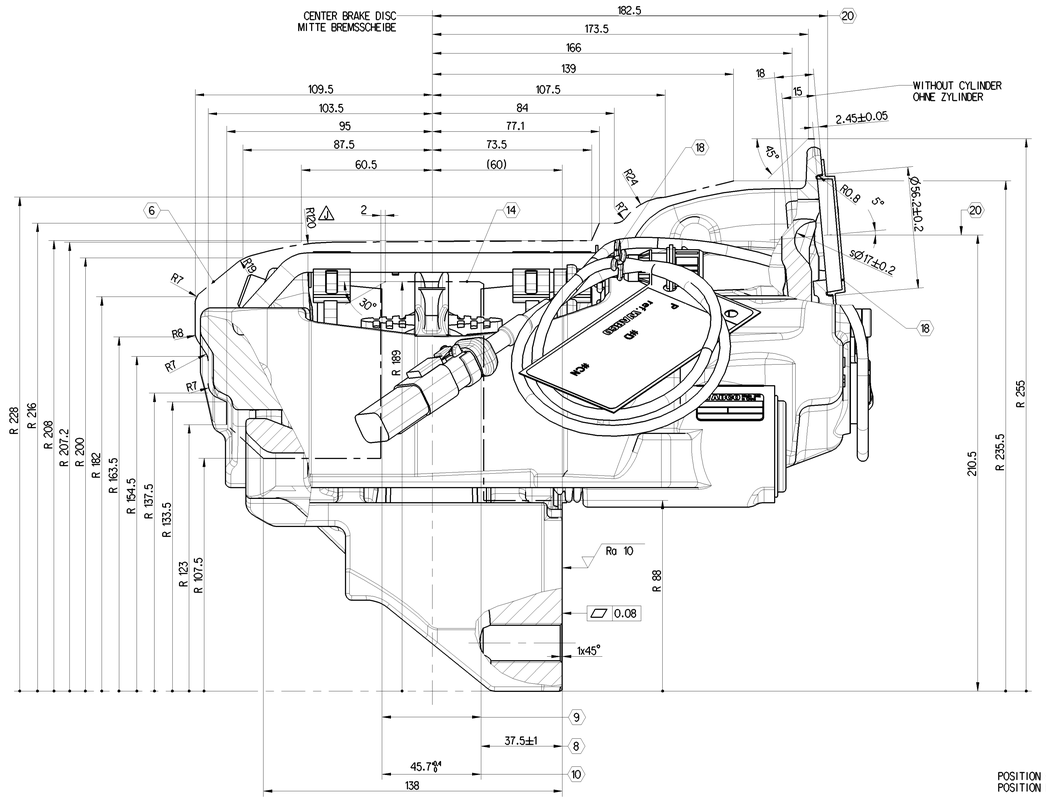

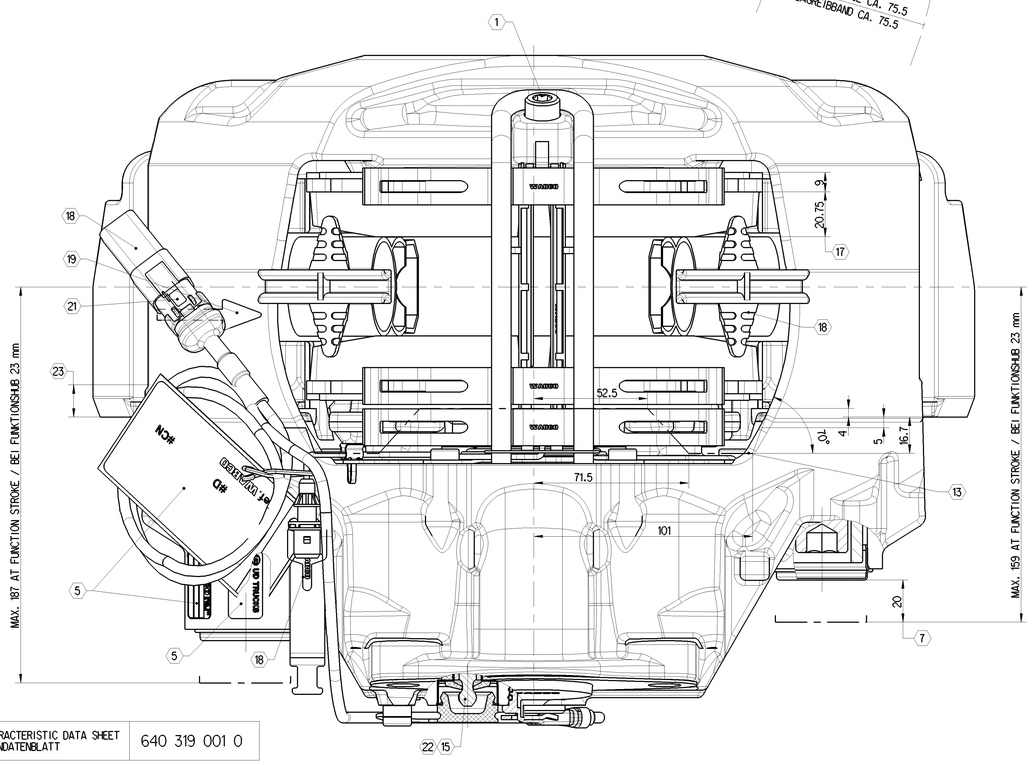

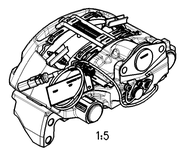

POSITION CABLE BRACKET
POSITION KABELHALTER

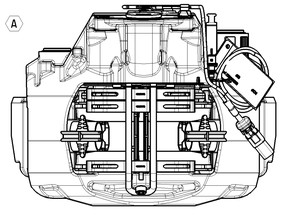

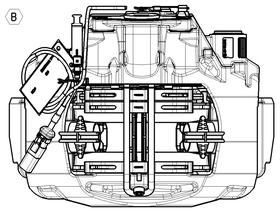

	TIGHTENING TORQUE ANZIEHDREHMOMENT	SCREW DRIVE SCHRAUBENANTRIEB	NOTE	BEMERKUNG
1	30 + 15 Nm	A/F 8 SW 8	PAD HOLD DOWN DEVICE ISO 4762 - M10x12 - 8.8	BUEGELBEFESTIGUNG ISO 4762 - M10x12 - 8.8
2				
3	9 ± 2 Nm	A/F 5 SW 5	WEAR SENSOR FASTENING ISO 4762 M6x8 - 8.8 ZINC-PLATED MICROENCAPSULATED	VERSCHLEISSSENSORBEFESTIGUNG ISO 4762 M6x8 - 8.8 VERZINKT MIKROVERKAPSELT
4	7 ± 2 Nm	T30	PLUG LOSS PROTECTION ISO 10664-30 M6 MICROENCAPSULATED	PLUG LOSS PROTECTION ISO 10664-30 M6 MICROENCAPSULATED

5 DETAILED INFORMATION FOR MARKING SEE 640 319 001 0 DOC CODE 922
DETAILLIERTE INFORMATIONEN ZUR KENNZEICHNUNG SIEHE 640 319 001 0 DOC CODE 922

6 MAX. STATICAL ROTARY OUTLINE
MAXIMALE STATISCHE ROTATIONSKONTUR

7 MIN. FUNCTION STROKE
MINIMALER FUNKTIONSHUB

8 FITTING DIMENSION OF THE DISC
SCHEIBENEINBAUMASS

9 BRAKE DISC NEW 45-0.2, WEARABLE UP TO 37
BREMSSCHEIBE NEU 45-0.2, VERSCHLEISSBAR BIS 37

10 ASSEMBLY DIMENSION FOR BRAKE PADS
EINBAUMASS FUER BREMSBELAEGE

11 ENVELOPE CURVE CALIPER
HUELLKURVE BREMSSATTEL

12

13 ENVELOPE CURVE CARRIER
HUELLKURVE BREMSENTRAEGER

14 MAXIMUM DISC CLEARANCE
SCHEIBENFREIGANG

15 HEXAGON WIDTH OVER FLATS 8
SECHSKANT SW 8

16

17 REMAINING PAD THICKNESS 2
RESTBELAGSTAERKE 2

18 FOR STORAGE AND SHIPMENT
FUER TRANSPORT UND LAGERUNG

19 FORWARD DRIVE-ROTATION DIRECTION
VORWAERTS DREHRICHTUNG

20 CENTER LINE CYLINDER
MITTE ZYLINDER

21 PRODUCT SPECIFICATION PAD WEAR SENSOR 441 039 002 0 DOC. CODE 035
PRODUKT SPEZIFIKATION BELAGVERSCHLEISSSENSOR 441 039 002 0 DOC. CODE 035

22 WITHOUT MIRROR IMAGE
KEIN SPIEGELBILD

23 VISUAL WEAR INDICATOR
OPTISCHE VERSCHLEISSANZEIGE

CHARACTERISTIC DATA SHEET KENNDATENBLATT	640 319 001 0

PRODUCT-SPECIFICATION 640 319 000 0
PRODUKT-SPEZIFIKATION 640 319 000 0

DIMENSIONS WITHOUT TOLERANCES ARE GAUGE DIMENSIONS
NICHT TOLERIERTE MASSE = LEHRENMASSE

640 319 035 0	A	MIRROR IMAGE / SPIEGELBILD	MAXX 19
640 319 034 0	B	AS SHOWN / WIE GEZEIGT	
640 319 031 0	B	MIRROR IMAGE / SPIEGELBILD	
640 319 026 0	B	MIRROR IMAGE / SPIEGELBILD	
640 319 025 0	A	AS SHOWN / WIE GEZEIGT	
IDENT-NO COMPLETE BRAKE MAT.-NR. BREMSE KOMPLETT	POSITION KABELHALTER POSITION CABLE BRACKET	BRAKE TYPE AUSFUEHRUNG BREMSE	

General Specification: JED-334-1 , Size ISO 14405 LP
Further Technical Data:
Doc. Code: | Sheet: | To

General Tolerances JED-261

Class 1)	Range of Nominal Dimensions [in mm] ≥ 0 ≤ 50	> 50 ≤ 180	> 180 ≤ 400	> 400	∢
Fine	0.5	1.0	1.5	2.0	
Medium X	1.0	2.0	3.0	4.0	±3°
Coarse	2.0	3.5	5.0	6.5	

Tapped Holes acc. JED-152
1) Tolerance Class Applied Crossmarked

Copyright WABCO®

Date	Drawn	Checked	Design
2022-04-07	Roenz	2022-04-07 Grosskopf	Grosskopf

WABCO

DISC BRAKE MAXX-RANGE
SCHEIBENBREMSE MAXX-REIHE

Mass	Scale	Material No.	Date of first issue	
33.6 kg	1 : 1	640 319 025 0	2014-07-04	
Size	CAD System		Doc.Code	Language	Sheet
A 0	CREO		053	DE	1/1

CDB No.	Revision	Indiv. Repl.	Replacement for
509294	1x	J 6928	

100mm

Tale documento la riproduzione e la divulgazione di questo documento, se non espressamente autorizzate, sono vietate. Ogni violazione comporta il risarcimento dei danni. Tutti i diritti sono riservati in caso di rilascio di brevetto o di registrazione di un modello di utilità o di un disegno o modello. Ce document est la propriété de WABCO qui en conserve tous droits de propriété intellectuelle. Il ne peut être utilisé ou communiqué à des tiers sans son accord écrit. Sous réserve de tous droits en cas de délivrance d'un brevet ou d'enregistrement d'un modèle d'utilité ou d'un dessin ou modèle. This document is the property of WABCO which retains all intellectual property rights. It may not be used or disclosed to third parties without our written consent. In the event of the grant of a patent or registration of a utility model or design, all rights are reserved. Este documento es propiedad de WABCO que conserva todos los derechos de propiedad intelectual. No puede ser utilizado o comunicado a terceros sin su consentimiento por escrito. Se reservan todos los derechos en caso de concesión de una patente o de registro de un modelo de utilidad o de un diseño o modelo. Questo documento è proprietà di WABCO che ne conserva tutti i diritti di proprietà intellectuale. Non può essere usato o divulgato a terzi senza il suo consenso scritto. Tutti i diritti sono riservati in caso di rilascio di un brevetto o di registrazione di un modello di utilità o di un disegno o modello. Dit document is eigendom van WABCO die alle intellectuele eigendomsrechten behoudt. Het mag niet zonder toestemming aan derden worden gebruikt of bekend gemaakt worden. Alle rechten zijn voorbehouden in geval van verlening van een octrooi of inschrijving van een gebruiksmodel of een model of tekening.