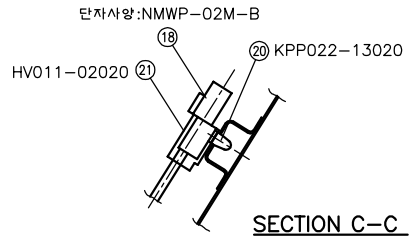

SECTION C-C

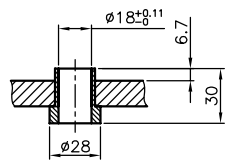

SECTION D-D
BL100 036 03/04 ONLY

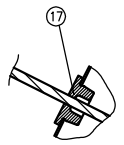

17 조립상세도

DUST COVER상에 흰색 볼펜잉크로 마킹할 것
TO BE MARKED THIS ARROWS BY WHITE INK

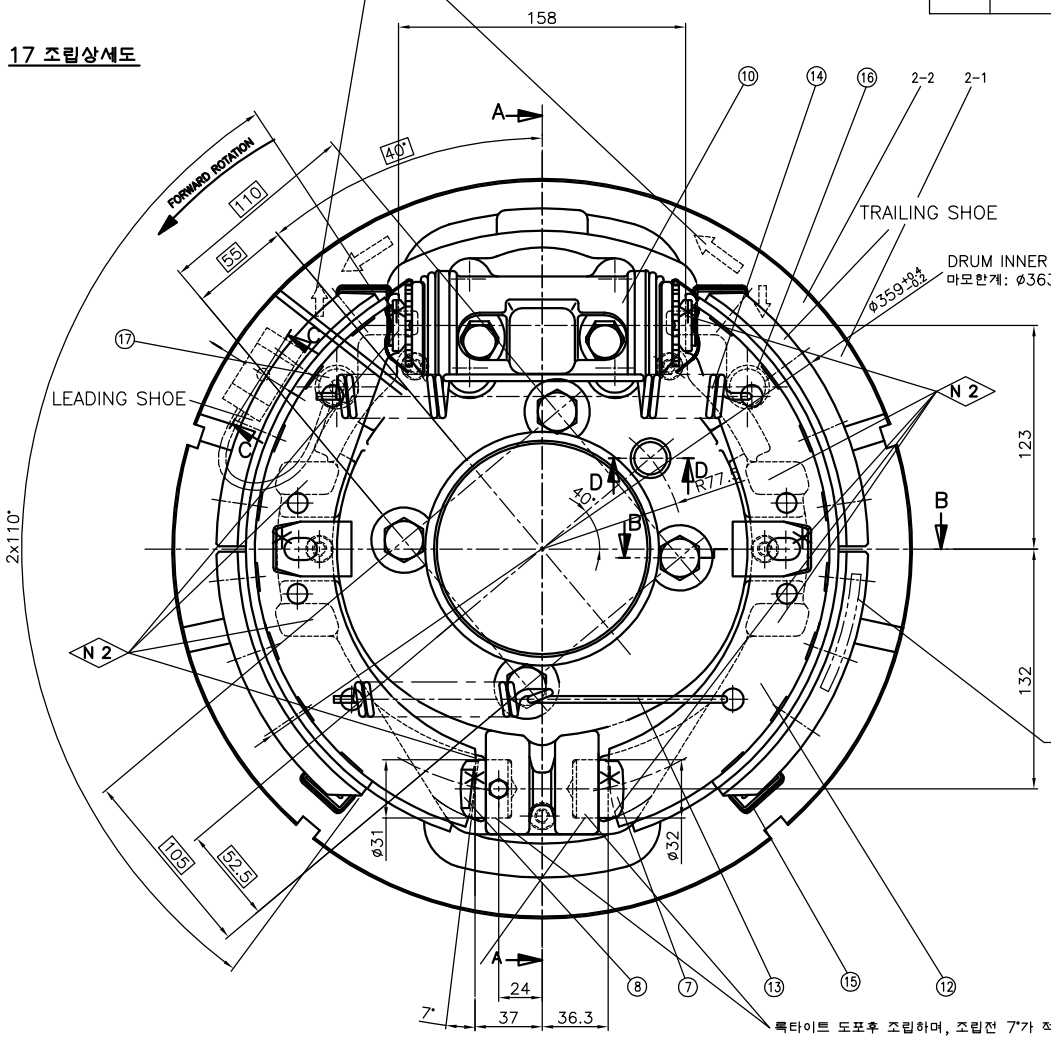

록타이트 도포후 조립하며, 조립전 7°가 적혀진 NUT가
LEADING SHOE측에 조립되었는지 확인할 것
TWO NUTS MUST BE ASSEMBLIED AFTER SMEARING WITH LOCKTITE
AND THE NUT WRITTEN 7° MUST BE FITTED ON THE LEADING SHOE

이동 또는 보관용
ONLY FOR SHIPMENT AND STORAGE

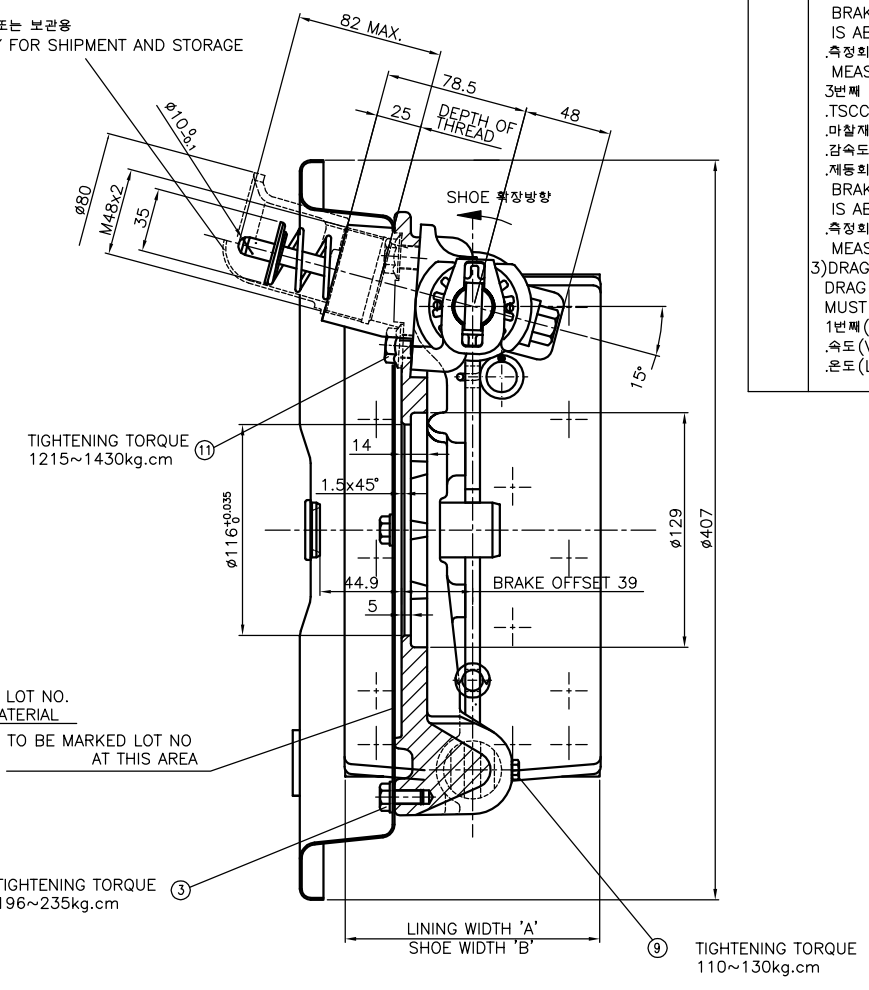

SECTION A-A

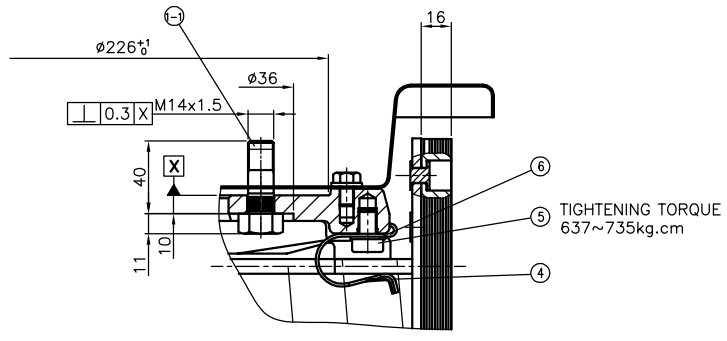

SECTION B-B

13번 13 301 191 형상

전선길이:(300MM)
ELECTRIC WIRE LENGTH:(300MM)

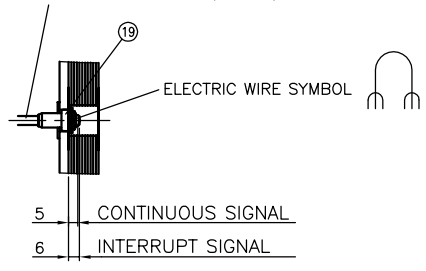

BL100 030 01/02	160	161	COSMOS
BL100 036 03/04	140	141	RHINO ABS
BL100 036 01/02	140	141	RHINO CBS
품 번	'A'	'B'	적용 차종

A1

N 1 N 3 N 4 N 5 N 6

4)염수분무평가:2BAR에서 SHOE 움직일 것
SALT SPRAY TEST:SHOE MUST BE MOVED AT
AIR PRESSURE 2 BAR
-염도(DENSITY)/시간(TIME):5%/48시간(HOURS)

N 6 마찰재 물성(LINING PROPERTY)

항 목 DESCRIPTION	기 준 SPEC.
비중 (g/cc) GRAVITY(g/cc)	2.1±0.1
경도(HRr) HARDNESS(HRr)	105±15
굴곡강도(kg/cm2) BENDING STRENGTH	MIN. 650
열팽창(mm) THERMAL EXPANSION(mm)	MAX. 0.5
기공율(%) PORE RATE(%)	10±2
PH	MIN. 8
재함유량(%) ASH INCLUSION(%)	73±5

2번째
.상온에서 냉각(COOLING AT ROOM TEMPERATURE)
3번째(3RD MODE)
.65KPH에서 10분동안 가동
RUNNING FOR 10 MINUTES AT 65KPH

4)마찰재 마모시험
-감속도(DECELERATION):0.3G
-온도(TEMPERATURE):200&250 ℃
-제동회수(BRAKING NO):각1000회(EACH1000CYCLE)
-SPEC. (LEADING SHOE)

제동온도(TEMPERATURE)	200	250
기준치(SPEC.)	0.36MAX.	0.61MAX.

5)시험제원(TEST SPECIFICAITON)
-THRESHOLD LOAD:420N
-INERTIA:44KG.M.SQ SEC
-RATIO:4.76
-MECHANICAL EFFICIENCY:85%
-DESIGN BRAKE FACTOR:3.0

N 5 ES 내구평가 (ES ENDURANCE TEST)
1)CHUCKER평가:9800NMx60,000회
CHUCKER TEST:9800NMx60,000CYCLE
2)내구평가I:JASO C 441에 의할 것
ENDURANCE TEST I:ACCORDING TO JASO C 441
3)내구평가II:1.2Gx1,000회
ENDURANCE TEST II:1.2Gx1,000CYCLE

N 4 ES 시험평가 (ES TEST)
1)DYNAMO 성능 TEST (PERFORMANCE TEST)
-SPEC: JASO C 407 T3

항 목 DESCRIPTION	RATIO (%) 50KPH	65KPH	80KPH
2효력(2ND EFF.) 상/하:0.3G/0.6G	3.0±0.4	2.9±0.4	2.5±0.4
	3.1±0.4	2.9±0.4	2.5±0.4
3효력(3ND EFF.) 상/하:0.3G/0.6G	3.0±0.4	2.7±0.4	2.8±0.4
	3.2±0.4	3.0±0.4	2.6±0.4
3RD FADE	60~150	–	–
3RECOVERY	60~150	–	–

2)자동간극 조정평가 (AUTO ADJUSTMENT TEST)
-TSCC: 0.2~2mm
-시험방법(TEST PROCEDURE)
1번째(1ST MODE)
.TSCC: 2.5mm
.마찰재 온도(LINING TEMPERATURE): 100°C
.감속도(DECELERATION)/제동회수(BRAKING NUMBER)
: 0.45G x 200 CYCLES
2번째(2ND MODE)
.TSCC: 1번째 TSCC (TSCC OF 1ST MODE)
.마찰재온도(LINING TEMPERATURE):200°C
.감속도(DECELERATION):0.45G
.제동회수:제동말기 온도 200°C이상될 때까지
BRAKING NUMBER: UNTIL LINING TEMPERATURE
IS ABOVE 200°C
.측정회수:200°C와 실온에서 간극측정
MEASUREMENT: 200°C AND ROOM TEMPERATURE
3번째 (3RD MODE)
.TSCC:2번째 TSCC (TSCC OF 2ND MODE)
.마찰재온도(LINING TEMPERATURE):250°C
.감속도(DECELERATION):0.45G
.제동회수:제동말기 온도 250°C이상될 때까지
BRAKING NUMBER:UNTIL LINING TEMPERATURE
IS ABOVE 250°C
.측정회수:250°C와 실온
MEASUREMENT: 250°C AND ROOM TEMPERATURE
3)DRAG평가:온도상승 30°C이하일 것
DRAG TEST:MAXIMUM INCREASE TEMPERATURE
MUST BE MAXIMUM 30°C
1번째(1ST MODE)
.속도(VEHICLE SPEED):60KPH
.온도(LINING TEMPERATURE):MAX 80°C

기 호 SYM	변경 사항 REVISIONS	변경번호 E.O.NO.	일자 DATE	작성 NAME	검도 CHK.	승인 APP.
	RELEASED		10/04/02	HKJI	MSKIM	
A	1.ABS/COSMOS 사양추가 2.LWWI BRKT 추가	26402005	13/08/02	HKJI	MSKIM	
B	1.CONN. CAP 추가	26402006	27/08/02	HKJI	MSKIM	

NOTES

N 1 LINING 표면에 GREASE나 OIL의 부착이 없을 것
LINING MUST BE FREE FROM CONTAMINANTS
INCLUDING GREASE AND OIL
N 2 LINED SHOE ASS'Y(11) 조립전에 SHOE상에 *표시부
6개소와 BRAKE SPIDER(1)와 LINED SHOE
ASS'Y(11)의 접촉면 4개소에 GREASE (LG-CARTEX
MULTIFAK EP2) 도포할 것
BEFORE FITTING LINED SHOE ASS'Y(11), 6 AREA
MARKED THUS * ON THE WEB AND 4 CONTACT
AREA BETWEEN BRAKE SPIDER(1) AND LINED SHOE
ASSY(11) MUST BE GREASED
GREASE SPECIFICATION: LG-CALTEX MULTIFAK EP2
N 3 LH: 본도 (AS DRAWN)
RH: 본도와 대칭 (OPPOSITE HAND)

RH QT'Y	LH QT'Y	RH QT'Y	LH QT'Y	RH QT'Y	LH QT'Y	순 번 ITEM NO.	부 품 명 PART NAME	부 품 번 호 PART NO.	OE 부 품 번 호 OE PART NO.	비 고 REMARKS
1	1	1	1	1	1	21	CONNECTOR CAP	BL454 036 01		
1	1	1	1	1	1	20	CLIP	BL453 036 01		
1	1	1	1	1	1	19	RING	13 701 083	A A84J 33 369	
1	1	1	1	1	1	18	LINING INDICATOR	BL451 030 01	A A84J 33 360	
1	1	1	1	1	1	17	GROMMET	13 826 024	A A84J 45 714	
1	1	1	1	1	1	16	RUBBER PLUG	BL373 032 01	A A84J 45 713	EPDM
6	6	6	6	6	6	15	RUBBER PLUG	BL373 031 01	A A84J 45 712	EPDM
1	1	1	1	1	1	14	PULL SPRING UPR	13 301 212	A A84J 33 751	
		1	1			13	PULL SPRING LOW	13 301 252	A A84J 33 761	본도
1	1			1	1	13	PULL SPRING LOW	13 301 191	A A84J 33 761	
2	2					12	LINED SHOE ASS'Y	BL210 037 01	OK98H 26 310	비석면
		2	2	2	2	12	LINED SHOE ASS'Y	BL210 036 01	OK98H 33 310	비석면
4	4	4	4	4	4	11	SCREW (M12)	17 429 114	A A84J 33 785	M12x1.5
1	1	1	1	1	1	10	EXPANDER UNIT	12 739 073	A A84J 33 850	
1	1	1	1	1	1	9	BOLT	DA166 001 01	K99795 0610	M6x1.0
1	1	1	1	1	1	8	CROSS NUT	BL263 036 02	A A84C 33 791	
1	1	1	1	1	1	7	CROSS NUT	BL263 036 01	A A84J 33 792	
2	2	2	2	2	2	6	SPRING WASHER	K500542	A A84J 33 787	
2	2	2	2	2	2	5	SCREW (M10)	18 428 090	A A84J 33 786	M10x1.0
2	2	2	2	2	2	4	LEAF SPRING	13 304 029	A A84J 33 771	
5	5	5	5	5	5	3	BOLT (M8)	DA010 005 00	11403 08161	M8x1.25
1	1	1	1	1	1	2-2	DUST COVER UPR	BL370 030 01	A A84J 33 875	
1		1		1		2-1	DUST COVER LOW	BL370 030 03	A A84J 33 874A	
	1		1		1	2-1	DUST COVER LOW	BL370 030 02	A A84J 33 874A	
4	4	4	4	4	4	1-1	BOLT-SERRATION	BL283 030 01	O K87Y 33 210	M14x1.5
		1				1	BRAKE SPIDER	BL120 036 04		
			1			1	BRAKE SPIDER	BL120 036 03		
1				1		1	BRAKE SPIDER	BL120 036 02	A A84J 33 710A	
	1				1	1	BRAKE SPIDER	BL120 036 01	A A84J 33 720A	

BL100 030 02G1	BL100 030 01G1	AA84J 04 980A	AA84J 04 990A
BL100 036 04A1	BL100 036 03A1	OK89J 33 980A	OK89J 33 990A
BL100 036 02B1	BL100 036 01B1	OK89H 33 980B	OK89H 33 990B

GENERAL SPECIFICATION JED-334.0 | ROUGH PART NO.
TREATMENT | SURFACE PROTECTION | MATERIAL

CADAM-DRAWING COPYRIGHT
DATE | SIGNATURE
DRAWN: 27/08/02 HKJI
CHECKED: 29/08/02 MSKIM
STANDARDIZATION:

WABCO

WEDGE BRAKE TYPE 360x140
KMC RHINO TRUCK

MASS: KG | SCALE: 1:2 | PRODUCT IDENTIFICATION NO.: BL100 036 00B1 | DOC. CODE | SHEET 1/
SIZE: A 1 | T.R.I. | FUNCTION CODE | SHAPE CODE | REPLACEMENT FOR
EXPERT CODE 700 | PRODUCT TYPE 92

NOT LIMITED TO BE NICHT TOLERIERTE SANS IND.TOLERANCES NON TOLERATE | DIMENSIONS LADEGEWMASSE COTES OMLINEARI ± | ANGULAR DIMENSIONS WINKELMASSE ANGLES DIMENSIONI ANGOLARI ± / | AND UND ET E ⊥ /

100mm

NON È PERMESSO CONFERMARE A TERZI O RIPRODURRE QUESTO DOCUMENTO, NE UTILIZZARNE IL CONTENUTO O REN-DERNE O COMUNICARNE NON È PERMESSO SENZA AUTORIZZAZIONE ESPLICITA. OGN AVENTE CONTITOLARITÀ DERIVANTI DA REGISTRATI O MODELLI DI UTILITÀ. IN CASO DI RICHIESTA DI BREVETTI O REGISTRAZIONE DI UN MODELLO DI UTILITÀ SI DEVE FARE RIFERIMENTO AL DOCUMENTO DI LAVORO.
DOCUMENT MAY NOT BE REPRODUCED OR GIVEN TO OTHERS AND THE USE OR COMMUNICATION OF THE CONTENTS THEREOF ARE FORBIDDEN WITHOUT EXPRESS AUTHORITY. OWNERSHIP OF TRADE SECRETS, PATENTS, OTHER RIGHTS ARISING OUT OF REGISTRATIONS OR UTILITY MODELS MAY EXIST. REFER TO THE WORKING DOCUMENT IN THE EVENT OF THE GRANT OF PATENT OR REGISTRATION OF A UTILITY MODEL OR DESIGNATING DOCUMENT IN THE SUBJECT OF COPYRIGHT.

TOUTE COMMUNICATION OU REPRODUCTION DE CE DOCUMENT,TOUTE EXPLOITATION OU COMMUNICATION DE SON CONTE-NU SONT INTERDITES, SAUF AUTORISATION EXPRESSE. TOUT MANQUEMENT A CETTE REGLE RENDRA LE CONTREVENANT PASSIBLE DE DOMMAGES-INTERETS. DES DROITS DE PROPRIETE INTELLECTUELLE NOTAMMENT EN MATIERE DE BREVETS ET DE MODELES DE UTILITE PEUVENT EXISTER. LE DOCUMENT DE TRAVAIL DOIT ETRE REFERE EN CAS DE DEPOT DE BREVET OU D'ENREGISTREMENT DE MODELE DE UTILITE OU DE DESIGNATION DANS LE DOMAINE DU DROIT D'AUTEUR.