Toute Communication ou reproduction de ce document, toute exploitation ou communication de son contenu sont interdites, sauf autorisation expresse. Tout manquement a cette regle constitue un abus evident et expose son auteur au versement de dommages et interets. Tous droits de propriete industrielle reserves, notamment en matiere de brevets et de modeles.

Weitergabe sowie Vervielfaeltigung dieser Unterlage, Verwertung und Mitteilung ihres Inhalts nicht gestattet, soweit nicht ausdrueckich zugestanden. Zuwiderhandlungen stellen einen offensichtlichen Missbrauch dar und verpflichten zu Schadenersatz. Alle Rechte fuer den Fall der Patenterteilung oder Gebrauchsmuster-Eintragung vorbehalten.

Non e permesso consegnare a terzi o riprodurre questo documento, ne utilizzarne il contenuto o renderlo comunque noto a terzi senza autorizzazione esplicita. Ogni infrazione costituira un evidente abuso e comportera il risarcimento dei danni subiti. E'fatta riserva di tutti i diritti derivanti da brevetti o modelli.

Copying of this document and giving it to others and the use or communication of the contents thereof, are forbidden without express authority. Contravention of this restriction will constitute an evident abuse and result in a liability to the payment of damages. All rights are reserved in the event of the grant of patent or registration of a utility model or design. This document is the subject of copyright.

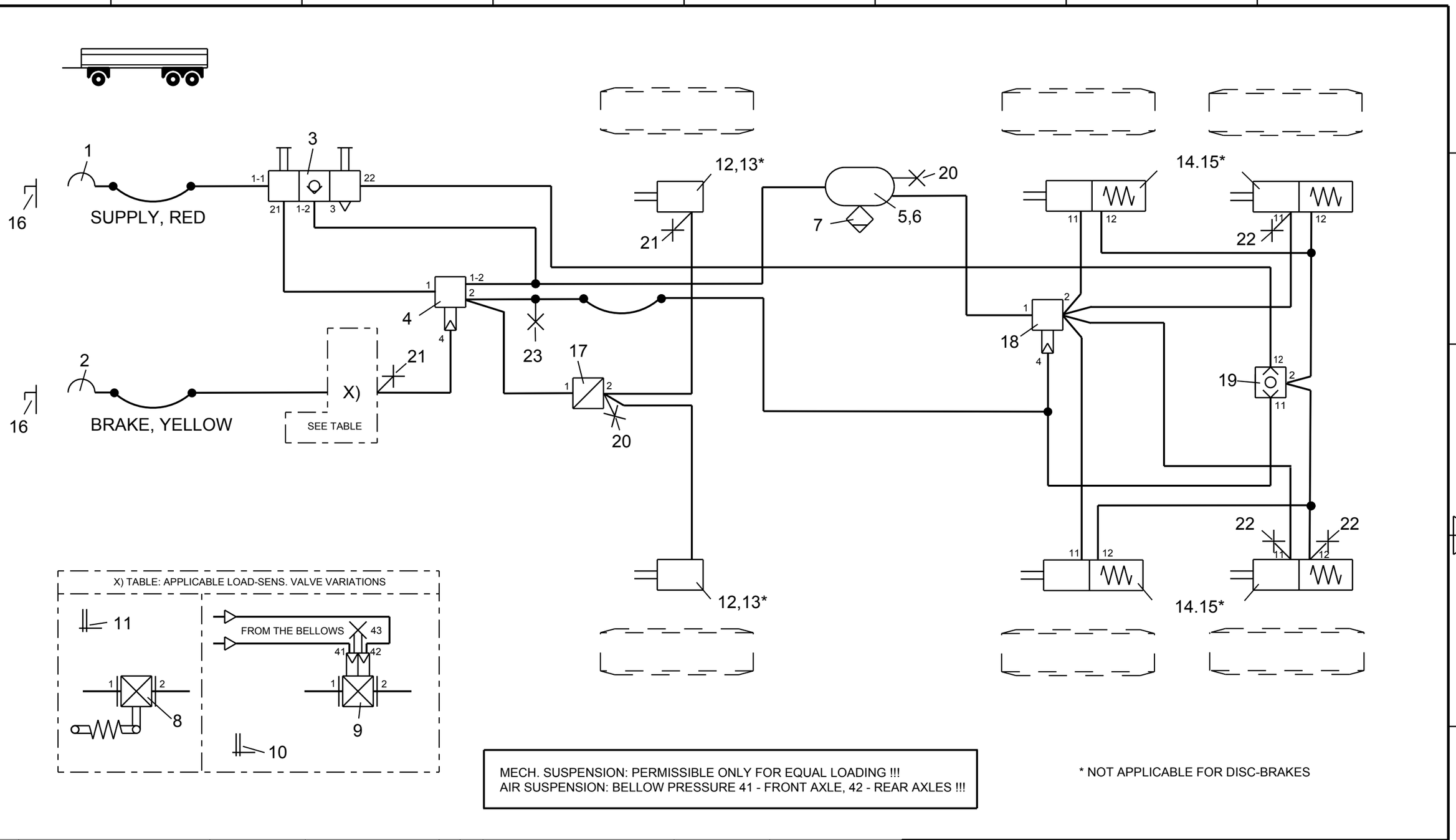

Pos.	Pcs.	Denomination		Product Identification No.	Pos.	Pcs.	Denomination		Product Identification No.
12	2	BRAKE CHAMBER		423 0	24				
11	1	TAG "SETTING VALUE OF LSV" MECH.	X)	899 144 630 4	23	1	TEST CONNECTION		463 703 ... 0
10	1	TAG "SETTING VALUE OF LSV" AIR	X)	899 144 631 4	22	3	TEST CONNECTION		463 703 036 0
9	1	LOAD-SENS.V. W. INTEGR. TEST VALVE	X)	475 714 50. 0	21	2	TEST CONNECTION		463 703 120 0
8	2	LOAD-SENS.V. W. INTEGR. FLEX ARM	X)	475 713 50. 0	20	2	TEST CONNECTION		463 703 115 0
7	1	DRAIN VALVE		934 300 001 0	19	1	TWO WAY-VALVE		434 208 055 0
6	2	HOSE CLAMP		451 999 ... 2	18	1	RELAY VALVE		973 011 0.. 0
5	1	AIR RESERVOIR		950 0	17	1	PRESS. LIMIT. VALVE		975 00. 0.. 0
4	1	TRAILER-BRAKE VALVE		971 002 ... 0	16	2	DUMMY COUPLING WITH FIXTURE		452 402 000 0
3	1	DOUBLE RELEASE VALVE		963 001 051 0	15	4	KIT	*	423 903 532 2
2	1	COUPLING HEAD W.INT.LINE FILTER		952 201 003 0	14	4	TRISTOP BRAKE ACTUATOR		925 0
1	1	COUPLING HEAD W.INT.LINE FILTER		952 201 004 0	13	2	KIT	*	423 ... 53. 2

Copyright WABCO®

Date	Signature
Drawn	
2014-08-18	BURMESTER
Checked	
2014-08-18	CHRONIS
Expert	
BURMESTER	

WABCO

TWO LINE-AIR BRAKING SYSTEM

FOR 3-AXLES-TRAILER

1xLOAD-SENS.VALVE, OPTION MECH./AIR

Mass	Scale	Material No.	Date of first issue:2014-08-18		
			Doc.Code	Language	Sheet
KG		841 601 137 0	002	EN	1/1
Size	CAD System				
A 3	Pro/E				

ECN-No.	Revision	Techn. Resp.	Replacement for
		4990	

100mm