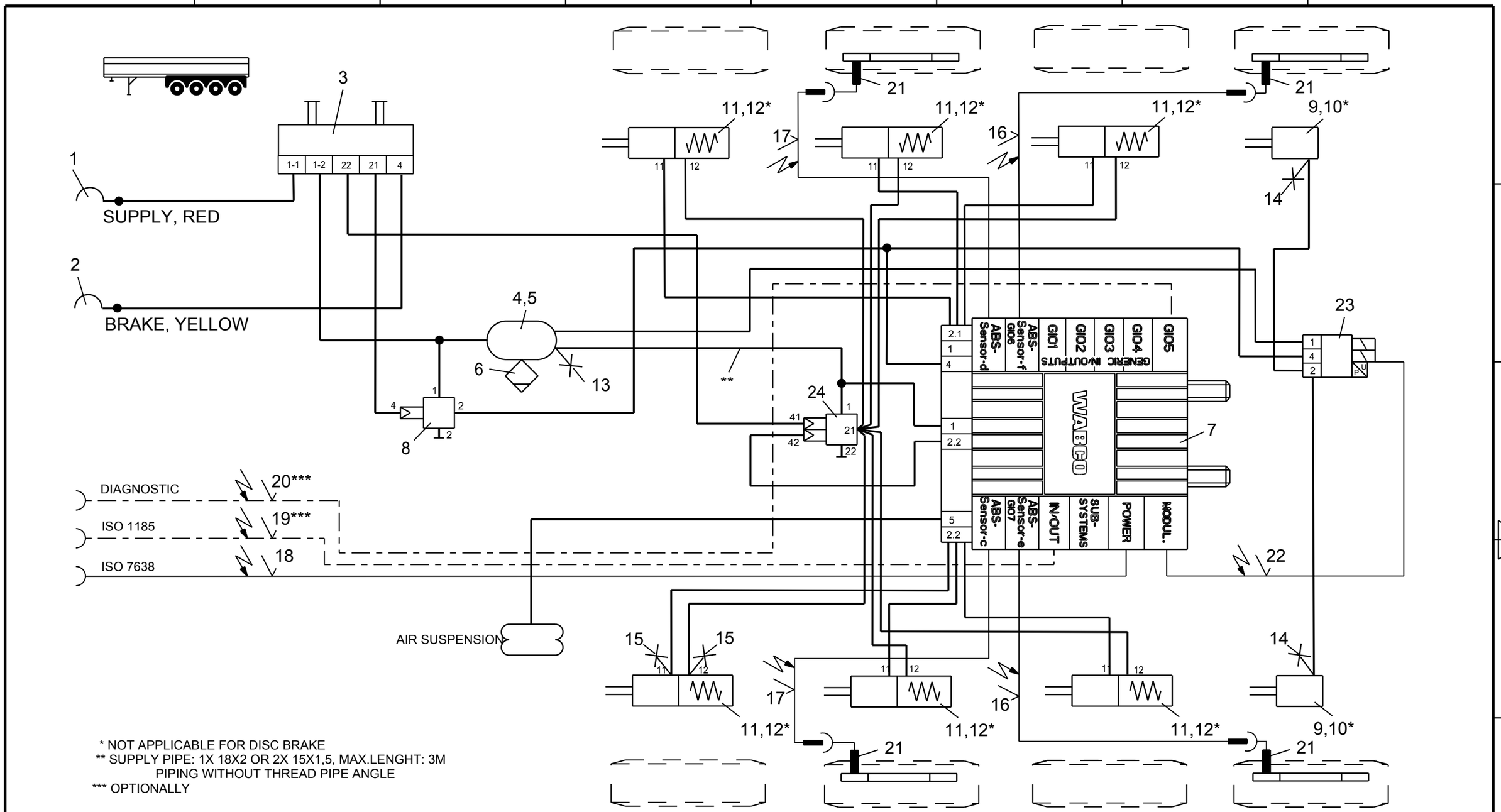

* NOT APPLICABLE FOR DISC BRAKE
** SUPPLY PIPE: 1X 18X2 OR 2X 15X1,5, MAX.LENGHT: 3M
PIPING WITHOUT THREAD PIPE ANGLE
*** OPTIONALLY

Pos.	Pcs.	Denomination		Product Identification No.	Pos.	Pcs.	Denomination		Product Identification No.
13	1	TEST CONNECTION		463 703 115 0					
12	6	KIT	*	423 903 532 2					
11	6	TRISTOP BRAKE ACTUATOR		925 0	24	1	OVERLOAD-PROTECTION VALVE		973 011 201 0
10	2	KIT	*	423 2	23	1	EBS-RELAY VALVE		480 207 0.. 0
9	2	BRAKE CHAMBER		423 0	22	1	CABLE TO EBS-RV		449 429 ... 0
8	1	RELAY VALVE		973 011 000 0	21	4	ABS-SENSOR		441 032 8.. 0
7	1	TRAILER-MODULATOR		480 102 ... 0	20	1	DIAGNOSTIC CABLE	***	449 611 ...0
6	1	DRAIN VALVE		934 300 001 0	19	1	24N-CABLE	***	449 349 ... 0
5	2	HOSE CLAMP		451 999 ... 2	18	1	SUPPLY (POWER) CABLE		449 173 ... 0
4	1	AIR RESERVOIR		950 0	17	2	EXTENSION CABLE FOR SENSOR		449 723 ... 0
3	1	PARK-RELEASE-EMERG.VALVE (PREV)		971 002 9.. 0	16	2	EXTENSION CABLE FOR SENSOR		449 723 ... 0
2	1	COUPLING HEAD W. INT. LINE FILTER		952 201 ... 0	15	2	TEST CONNECTION		463 703 036 0
1	1	COUPLING HEAD W. INT. LINE FILTER		952 201 ... 0	14	2	TEST CONNECTION		463 703 120 0

Copyright WABCO®

Date	Signature
Drawn	
2012-06-06	BURMESTER
Checked	
2012-06-06	CHRONIS
Expert	
BURMESTER	

WABCO

TRAILER - EBS E

FOR 4-AXLES SEMITRAILER
4S/3M

Mass	Scale	Material No.			Date of first issue:2012-06-06		
					Doc.Code	Language	Sheet
KG		841 701 245 0			002	EN	1/1
Size	CAD System						
A 3	Pro/E	ECN-No.	Revision	Techn. Resp.	Replacement for		
		-	-	4990			

100mm

Toute Communication ou reproduction de ce document, toute exploitation ou communication de son contenu sont interdites, sauf autorisation expresse. Tout manquement a cette regle constitue un abus evident et expose son auteur au versement de dommages et interets. Tous droits de propriete industrielle reserves, notamment en matiere de brevets et de modeles.

Weitergabe sowie Vervielfaeltigung dieser Unterlage, Verwertung und Mitteilung ihres Inhalts nicht gestattet, soweit nicht ausdruecklich zugestanden. Zuwiderhandlungen stellen einen offensichtlichen Missbrauch dar und verpflichten zu Schadenersatz. Alle Rechte fuer den Fall der Patenterteilung oder Gebrauchsmuster-Eintragung vorbehalten.

Non e permesso consegnare a terzi o riprodurre questo documento, ne utilizzarne il contenuto o renderlo comunque noto a terzi senza autorizzazione esplicita. Ogni infrazione costituira un evidente abuso e comportera il risarcimento dei danni subiti. E'fatta riserva di tutti i diritti derivanti da brevetti o modelli.

Copying of this document and giving it to others and the use or communication of the contents thereof, are forbidden without express authority. Contravention of this restriction will constitute an evident abuse and result in a liability to the payment of damages. All rights are reserved in the event of the grant of patent or registration of a utility model or design. This document is the subject of copyright.