FIRST ANGLE PROJECTION

SURFACE PROTECTION OBERFLAECHENSCHUTZ PROTECTION DE SURFACE PROTEZIONE SUPERFICIALE	
I	JED-259
II	JED-256
III	JED-471 SCHWARZ/BLACK
IV	KUNSTSTOFF

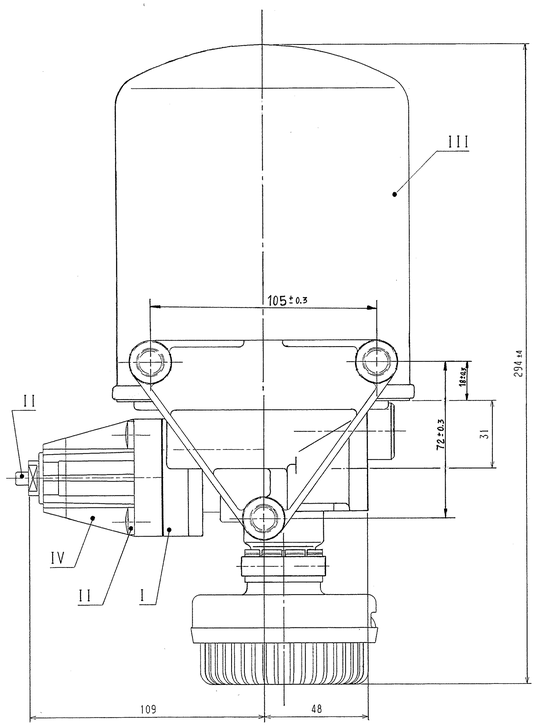

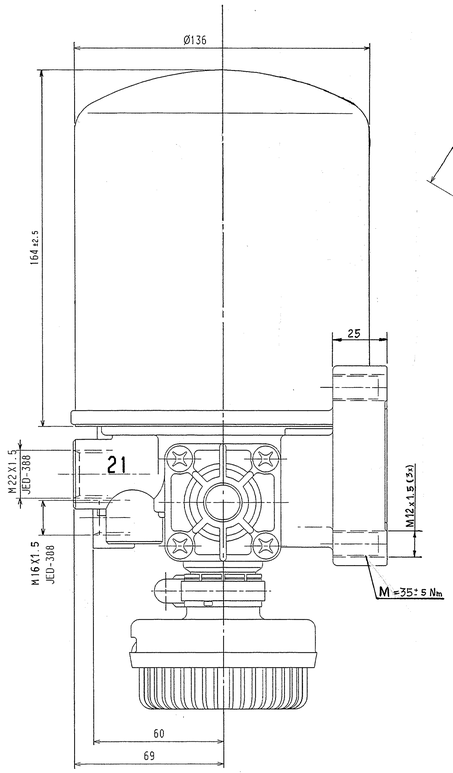

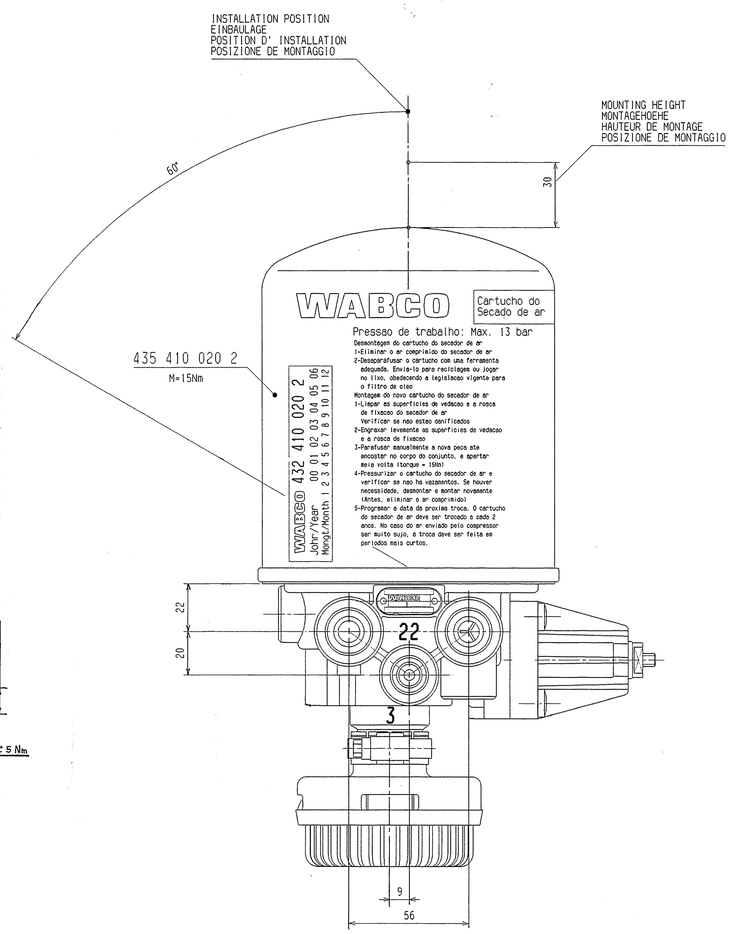

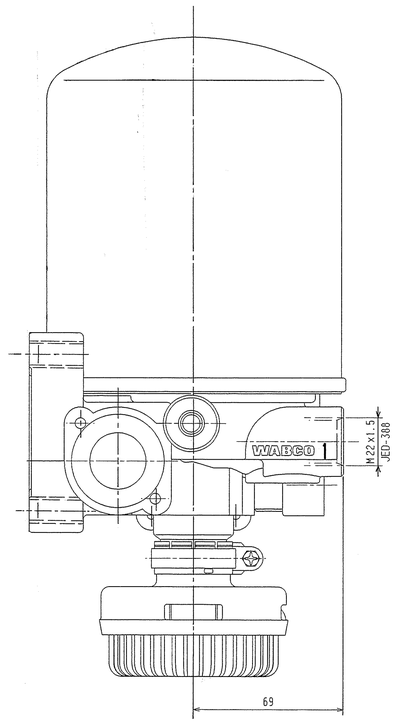

THERMAL RANGE OF CONTINUOUS APPLICATION:
THERMISCHER DAUERANWENDUNGSBEREICH:
PLAGE DE TEMPERATURE EN UTILISATION CONTINUE:
COMPO DI APPLICAZIONE CONTINUA: -40°C....+65°C

RESISTANCE TO HEAT:
WAERMEBESTAENDIGKEIT:
RESISTANCE A LA CHALEUR:
RESISTANZA AL CALORE: MAX. +80°C

MEDIUM: COMPRESSED AIR
MEDIUM: DRUCKLUFT
FLUIDE: AIR COMPRIME
FLUIDO: ARIA COMPRESSA

WORKING PRESSURE:
BETRIEBSDRUCK:
PRESSION DE SERVICE:
PRESSIONE D' ESERCIZIO: P_e max. = 13 bar

TORQUE FOR CONNECTIONS:
ANZUGSMOMENT FUER EINSCHRAUBSTUTZEN: M16x1.5 : $M_{max.}$ = 34 Nm
COUPLE DE SERRAGE DES RACCORDS: M22x1.5 : $M_{max.}$ = 53 Nm
COPPIA DI SERRAGIO DEI RACCORDI:

MAX. PERMISSIBLE FREQUENCY
MAX. ZULAESSIGE FREQUENZ
MAX. ADMISSIBLE FREQUENZE
MAX. ADMISSIBLE FREQUENZA 50 Hz

MAX. PERMISSIBLE ACCELERATION:
MAX. ZULAESSIGE BESCHLEUNIGUNG:
ACCELERATION MAX. ADMISSIBLE:
ACCELERAZIONE MAX. AMMESSA: ±10xg

INSTALLATION POSITION AS DRAWN
EINBAULAGE WIE GEZEICHNET
POSITION D' INSTALLATION SUIVANT DESSIN
POSIZIONE DI MONTAGGIO COME DISEGNATO

COMBINED UNLOADER: DRUCKREGLER: REGULATEUR DE PRESS.: GRUPPO DI REGULAZIONE:	CUT OUT PRESSURE ABSCHALTDRUCK PRESSION DE DECL. PRESSIONE D'APERT	DYNAMIC PRESSURE OF THE SAFETY VALVE STAUDRUCK DES SICHERHEITSVENTILES PRESSION DYNAMIQUE DU SOUPAPE DE SECURITE PRESSIONE DINAMICA DELLA VALVOLA DI SICUREZZA
	(BAR)	(BAR)
	7.1 ÷ 8.5 8.6 ÷ 10.0	≤14.5 (BEI V_n = 100cm³/min.) ≤16.0 (BEI V_n = 100cm³/min.)

COMBINED UNLOADER: DRUCKREGLER: REGULATEUR DE PRESS.: GRUPPO DI REGULAZIONE:	CUT OUT PRESSURE ABSCHALTDRUCK PRESSION DE DECL.. PRESSIONE D'APERT.	$10^{+0.2}$ bar.	OPERATING RANGE SCHALTSPANNE PLACE DE REGULATION. GAMME DE REGUL..	$0.7^{+0.6}_{-0.2}$ bar.

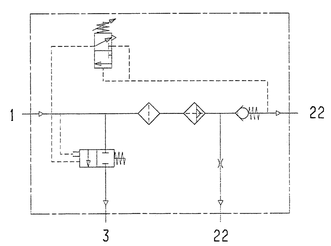

1	FROM THE COMPRESSOR VOM KOMPRESSOR PROVENANT DU COMPRESSEUR PROVENIENTE DEL COMPRESSORE
21	TO THE RESERVOIRS ZU DEN LUFTBEHAELTERN AUX RESERVOIR AL SERBATOII PER
22	TO THE RESERVOIRS FOR REGENERATED AIR ZUM REGENERATIONS-LUFTBEHAELTER AUX RESERVOIRS D' AIR REGENERE AL SERBATOII PER L' ARIA RIGENERATA
3	EXHAUST FOR COMPRESSED AIR ENTLUEFTUNG FUER DRUCKLUFT ECHAPPEMENT POUR AIR COMPRIME SCARIO PER ARIA COMPRESSA

WABCO FREIOS S.SET.CO. SALDANHA ARTE

GENERAL SPECIFICATION: JED-334				
FURTHER TECHNICAL DATA:				
DOC. CODE:	SHEET: 13			
GENERAL TOLERANCES				
CLASS ISO	RANGE OF NOMINAL DIMENSIONS (± mm)			
	≤50	>50 ≤180	>180 ≤400	>400
FINE	0.5	1.0	1.5	2.0
MEDIUM	1.0	2.0	3.0	4.0
COARSE	2.0	3.5	5.0	6.5
TAPPED HOLES ACC. ISO 4229 / JED-150				
ISO TOLERANCE CLASS APPLIED UNDESIGNATED				

L	
K	
J	
H	
G	
F	
E	
D	
C	
B	
A	
DCN-NO.	REV.

COPYRIGHT		
DATE	SIGNATURE	
28.08.02	A.B.Nunes	
CHECKED		
29.08.2002		
STANDARDISATION		
09/09/02		
MASS	SCALE	
KG	1:1	
SIZE	T.N.R.N.	
A0		

WABCO

AIR DRYER
LUFTTROCKNER
DESSICATORE D' AIR
ESSICATORE D' ARIA

PRODUCT IDENTIFICATION NO.
884 503 267 0

DOC. CODE: 605
SHEET: 1/1

PROD. GROUP | SHEET CODE | REPLACEMENT FOR

10 DCC | EXPORT CODE | PRODUCT TYPE