CONTACT ALLOCATION
KONTAKTBELEGUNG
AFFECTUATION DES CONTACTS
APPLICATIONE DEI CONTATTI

Pin	Connector A
1	Battery (Kl.30)
2	do not connect
3	Ground (Kl.31)
4	Boot / Door
5	do not connect
6	Ignition (Kl.15)
7	CAN Datalink High
8	CAN Datalink Low
9	CAN Shield
Pin	**Connector B**
1	Valve Block Supply
2	Air Spring Solenoid FL
3	Air Spring Solenoid FR
4	Exhaust Solenoid Supply
5	Air Spring Solenoid RL
6	Air Spring Solenoid RR
7	Exhaust Solenoid
8	Reservoir Solenoid
9	do not connect
10	Acceleration Sensor 1 Supply
11	Acceleration Sensor Signal 1
12	Acceleration Sensor 1 Ground
13	Acceleration Sensor 2 Supply
14	Acceleration Sensor Signal 2
15	Acceleration Sensor 2 Ground
16	Acceleration Sensor 3 Supply
17	Acceleration Sensor Signal 3
18	Acceleration Sensor 3 Ground
Pin	**Connector C**
1	Sensor Supply FL
2	Height Sensor Signal FL
3	Sensor Ground FL
4	Sensor Supply FR
5	Height Sensor Signal FR
6	Sensor Ground FR
7	Sensor Supply RL
8	Height Sensor Signal RL
9	Sensor Ground RL
10	Sensor Supply RR
11	Height Sensor Signal RR
12	Sensor Ground RR
13	Pressure Sensor Supply
14	Pressure Sensor Signal
15	Pressure Sensor Ground
Pin	**Connector D**
1	Damper FL
2	Damper RL
3	do not connect
4	Damper Supply FL
5	Damper Supply FR
6	do not connect
7	Damper Supply RL
8	Damper Supply RR
9	do not connect
10	Damper FR
11	Damper RR
12	do not connect
Pin	**Connector E**
1	Compressor Relay (High Side)
2	Compressor Relay (Low Side)
3	do not connect
4	do not connect
5	Compressor Temperature Sensor
6	Compressor Temperature Sensor

MATERIAL MATERIAU MATERIAL MATERIALE		
I	ABS GF17	JED-465-6 BLACK
II	St Zn	JED-585-2
III	PBT GF20	JED-375-1 GREY
IV	CuSn + Sn	
V	POLYESTER	

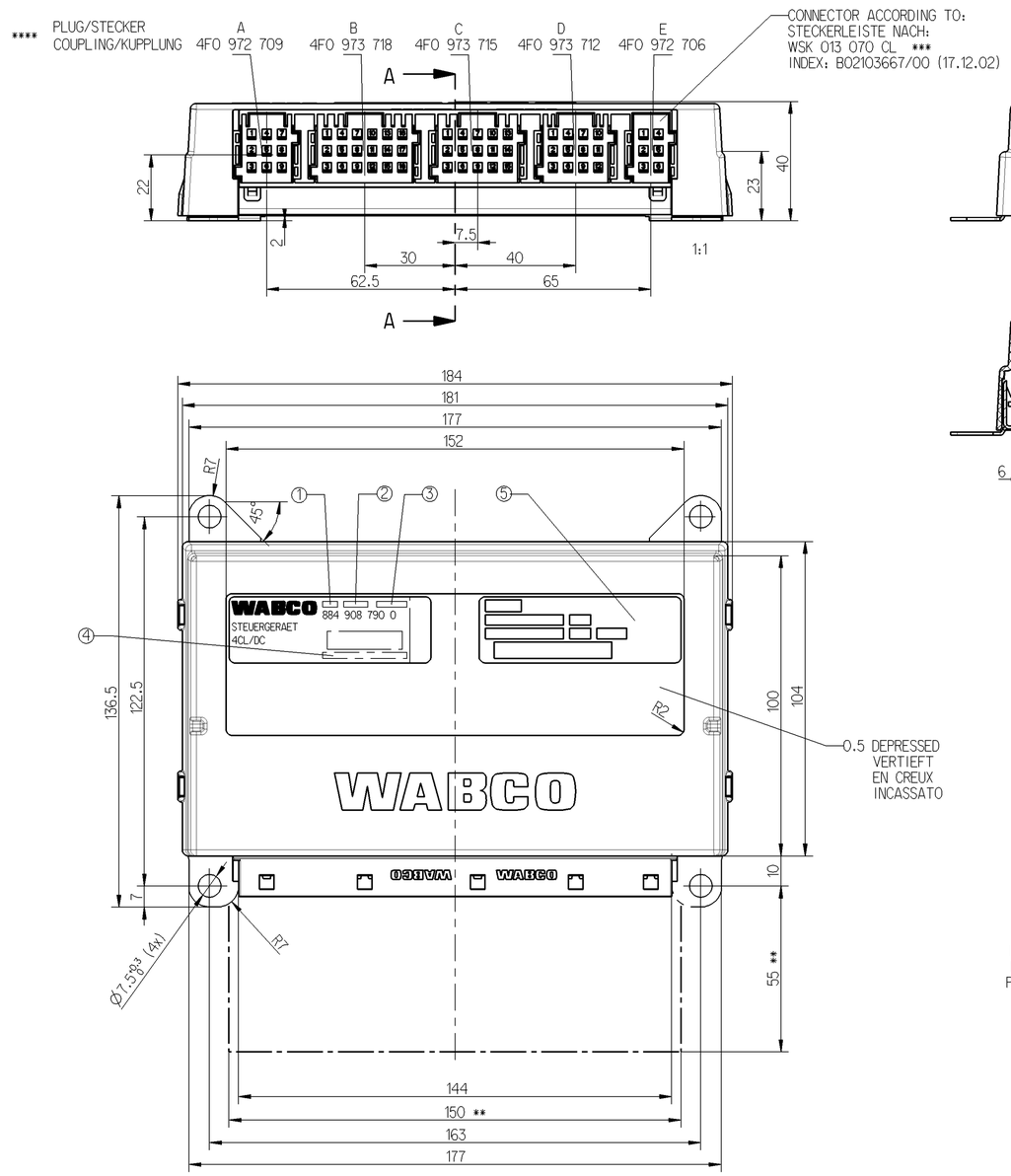

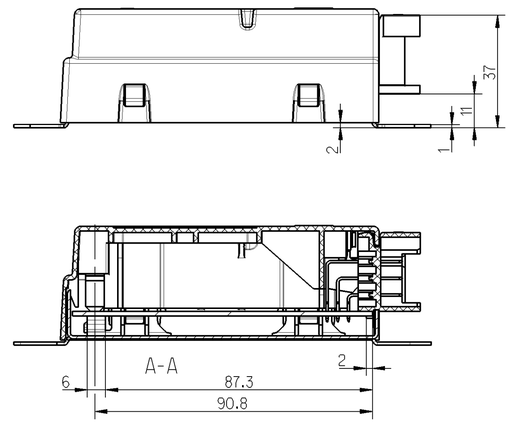

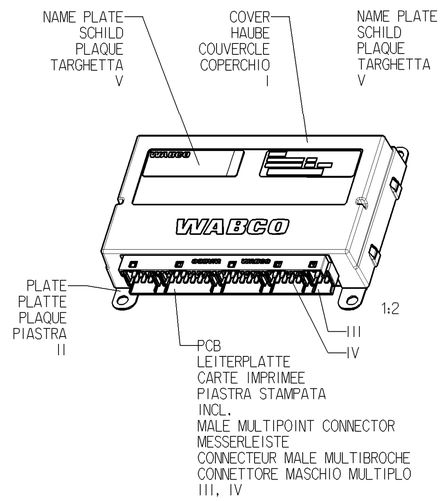

VOLTAGE:
SPANNUNG: 9 - 15.3 V DC *
TENSION:
TENSIONE:

DEGREE OF PROTECTION: ISO 20653 IP5KO:
"THE INGRESS OF DUST SHALL ONLY BE IN AMOUNTS WHICH DO NOT IMPAIR FUNCTION OR SAFETY." ADDITIONALLY APPLIES:
A WIRE OF d = 1.0 mm, 100 mm LENGTH MAY FULLY PENETRATE BUT SHALL HAVE ADEQUATE CLEARANCE FROM HAZARDOUS PARTS."
SCHUTZART: ISO 20653 IP5KO:
"STAUB DARF NUR IN EINER SOLCHEN MENGE EINDRINGEN, DASS DIE FUNKTION UND DIE SICHERHEIT NICHT BEEINTRAECHTIGT WERDEN." ZUSAETZLICH GILT:
"EIN DRAHT MIT d = 1.0 mm, 100 mm LANG DARF VOLL EINDRINGEN, MUSS ABER AUSREICHENDEN ABSTAND VON GEFAEHRLICHEN TEILEN HABEN."

THERMAL RANGE OF APPLICATION:
THERMISCHER ANWENDUNGSBEREICH: -40°C ... +70°C
GAMME D'APPLICATION THERMIQUE:
CAMPO TERMICO D'APPLICAZIONE:

NON-OPERATING TEMPERATURE:
TEMPERATUR AUSSER BETRIEB: -40°C ... +90°C
TEMPERATURE HORS FONCIONNEMENT:
TEMPERATURA FUORI ESERCIZIO:

* FURTHER TECHNICAL DATA SEE PRODUCT SPECIFICATION
WEITERE TECHNISCHE DATEN SIEHE PRODUKTSPEZIFIKATION
POUR AUTRES DONNEES TECHNIQUES VOIR SPECIFICATION DU PRODUIT
PER ULTERIORI DATI TECNICI VEDERE SPECIFICA DI PRODOTTO

** SPACE FOR CONNECTOR
BAURAUM FUER STECKER
ESPACE POUR CONNECTEUR
SPAZIO PRE CONNETTORE

*** DEVIATIONS:
DEPTH OF INDENTATION FOR LOCKING MECHANISM 4.5 mm
LATERAL WALL AREAS RECESSED BY 5 mm
INNER WALLS REPLACED BY RIB STRUCTURE
ABWEICHUNGEN:
SCHNAPPFENSTER FUER VERRIEGELUNG 4.5 mm TIEF
SEITLICHE WANDBEREICHE UM 5 mm ZURUECKVERSETZT
INNENWAENDE DURCH VERRIPPUNG ERSETZT

**** CABLE-SIDE CONNECTOR IS NOT INCLUDED IN WABCO'S SCOPE OF SUPPLY.
WABCO DOES NOT ASSUME THE TECHNICAL RESPONSABILITY.
KABELSEITIGER STECKER GEHOERT NICHT ZUM WABCO-LIEFERUMFANG.
WABCO UEBERNIMMT KEINE TECHNISCHE VERANTWORTUNG.
LA LIVRAISON WABCO NE COMPREND PAS LE CONNECTEUR COTE CABLE.
WABCO N'ASSUME PAS LA RESPONSABILITE TECHNIQUE.
CONNETTORE LATTO CAVO NON COMPRESO NELLA FORNITURA WABCO.
WABCO NON ASSUME LA RESPONSABILITA TECNICA.

① PRI JED-225

② DATE OF MANUFACTURE:
HERSTELLDATUM: JED-226
DATE DE FABRICATION:
DATA DI FABRICAZIONE:

③ SERIAL NUMBER
FORTSCHRITTZAHL
NUMERO DE SERIE
NUMERO DI SERIE

④ COUNTRY OF ORIGIN
HERSTELLLAND
PAYS D'ORIGINE
PAESE D'ORIGINE

⑤ COSTUMMER LABEL
KUNDENAUFKLEBER
ETIQUETTE ADHESIVE DU CLIENT
ETICHETTA ADESIVA DEL CLIENTE

DETAILS SEE LABELING INFORMATION. CODE 922
DETAILS SIEHE LABELING INFORMATION. CODE 922
DETAILS VOIR LABELING INFORMATION. CODE 922
DETTAGLI VEDERE LABELING INFORMATION. CODE 922

RECOMMENDED INSTALLATION POSITION:
EMPFOHLENE EINBAULAGE:
POSITION D'INSTALLATION RECOMMANDEE:
POSIZIONE DI MONTAGGIO RACCOMMANDATA:

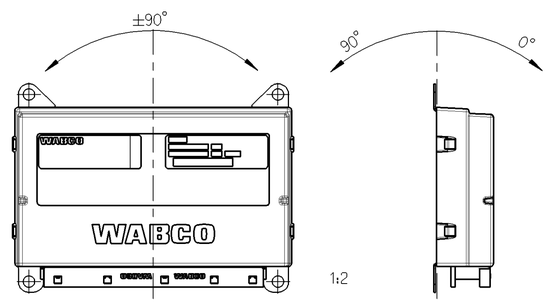

General Specification: JED-334-0		
Further Technical Data:		
Doc. Code:	Sheet:	To

General Tolerances JED-261

Class 1)	Range of Nominal Dimensions (± mm) ≤ 50	> 50 ≤ 180	> 180 ≤ 400	> 400	∢
Fine	0.5	1.0	1.5	2.0	±3°
Medium X	1.0	2.0	3.0	4.0	
Coarse	2.0	3.5	5.0	6.5	

Tapped Holes acc.
1) Tolerance Class Applied Crossmarked

DCN-No.	Rev.	Date
State of Revision		

Copyright WABCO ®

Date	Signature
Drawn 2007-06-20	BAK
Checked 2007-06-26	Meier
Expert PUPPICH	

WABCO

ELEKTRONIC
ELEKTRONIK
ELECTRONIQUE
ELETTRONICA

ECAS ECU AUDI C6

Mass	Scale	Material No.	WABCO Id. No.: 8849087900		
0.43 KG	1:1 (h2)	884 908 790 0	Doc.Code 005	Language ML	Sheet 1/1
Size A 1	TRI 620		Function Code	CAD System Pro/E	Prod.Type 0 1 X
			Replacement for		

100mm

Toute Communication ou reproduction de ce document, toute exploitation ou communication de son contenu sont interdites, sauf autorisation expresse. Tout manquement à cette règle constitue un délit, engage la responsabilité de celui-ci et expose son auteur au versement de dommages et intérêts. Tous droits de propriété industrielle et droits d'auteur réservés par WABCO.

Weitergabe sowie Vervielfältigung dieser Unterlage, Verwertung und Mitteilung ihres Inhalts nicht gestattet, soweit nicht ausdrücklich zugestanden. Zuwiderhandlungen stellen strafrechtliche Tatbestände und verpflichten zu Schadensersatz. Alle Rechte für den Fall der Patenterteilung oder Gebrauchsmustereintragung vorbehalten.

Non è permesso consegnare o terzi o riprodurre questo documento, né utilizzarne il contenuto o renderlo comunque noto a terzi senza autorizzazione espressa. Ogni infrazione costituisce un illecito civile e comporta il dovere di risarcire i danni. Tutti i diritti di proprietà industriale e diritti d'autore sono riservati da WABCO.

Copying of this document and giving it to others and the use or communication of the contents thereof, are forbidden without express authority. Offenders are liable to the payment of damages. All rights are reserved in the event of the grant of patent or registration of a utility model or design. The document is subject to WABCO copyright.