A	B	C	D	E	F	G	N	O	R
∅12,1		~2,6	∅15		~9,2	45°		ISO8434-1	

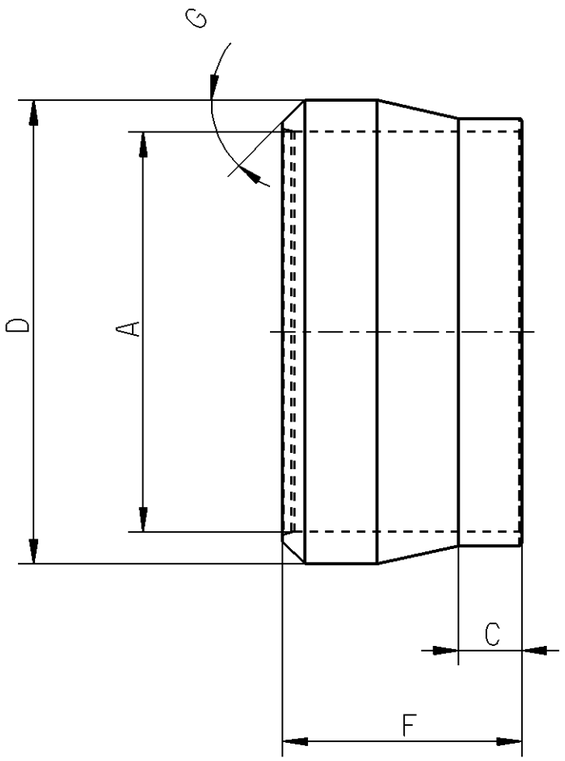

Material : CuZn

First production samples, samples from new or modified moulds or changes of every kind must be approved Engineering Department	
Teile der ersten Produktion, Teile aus neuen oder geaenderten Formwerkzeugen oder Aenderungen jeglicher Art beduerfen der Genehmigung durch die Entwicklungsabteilung	
Les premieres pieces de production, les pieces provenant de nouvaux moules ou de moules modifies, ou toutes autres modification, doivent etre approuvees par le departement des etudes	
Campioni di inizio produzione, campioni ottenuti con stampi nuovi o modificati o con qualsiasi genere di mofica devono essere approvati dall'ufficio tecnico.	

General Specification: JED-334-0

Further Technical Data:

Doc. Code: Sheet: To

General Tolerances JED-261

Class 1)	Range of Nominal Dimensions (± mm) ≤ 50	> 50 ≤ 180	> 180 ≤ 400	> 400	∢
Fine	0.5	1.0	1.5	2.0	±3°
Medium	1.0	2.0	3.0	4.0	
Coarse	2.0	3.5	5.0	6.5	

Tapped Holes acc.

1) Tolerance Class Applied Crossmarked

Copyright WABCO®

Date	Signature
Drawn 2009-09-22	Guemues
Checked 2009-09-22	Maertin
Expert Thiele	

WABCO

Clamping Ring
Klemmring
Anneau de serrage
Anello di fissaggio

Mass	Scale	Material No.	Date of first issue: 2008-04-17
0,004 KG	/	893 050 451 4	Doc.Code 005 / Language ML / Sheet 1/1
Size A 3	CAD System Pro/E		

ECN-No.	Revision	Techn. Resp.	Replacement for
151173	- A	5790	-

100mm

Non e permesso consegnare a terzi o riprodurre questo documento, ne utilizzarne il contenuto o renderlo comunque noto a terzi senza autorizzazione esplicita. Ogni infrazione costituira un evidente abuso e comportera il risar cimento dei danni subiti. E'fatta riserva di tutti i diritti derivanti da brevetti o modelli.

Copying of this document and giving it to others and the use or communication of the contents thereof, are forbidden without express authority. Contravention of this restriction will constitute an evident abuse and result in a liability to the payment of damages. All rights are reserved in the event of the grant of patent or registration of a utility model or design. This document is the subject of copyright.

Toute Communication ou reproduction de ce document, toute exploitation ou communication de son contenu sont interdites, sauf autorisation expresse. Tout manquement a cette regle constitue un abus evident et expose son auteur au versement de dommages et interets. Tous droits de propriete industrielle reserves, notamment en matiere de brevets et de modeles.

Weitergabe sowie Vervielfaeltigung dieser Unterlage, Verwertung und Mitteilung ihres Inhalts nicht gestattet, soweit nicht ausdrueckllich zugestanden. Zuwiderhandlungen stellen einen offensichtlichen Missbrauch dar und verpflichten zu Schadensersatz. Alle Rechte fuer den Fall der Patenterteilung oder Gebrauchsmuster-Eintragung vorbehalten.