Non e permesso consegnare a terzi o riprodurre questo documento, ne utilizzarne il contenuto o renderlo comunque noto a terzi senza autorizzazione esplicita. Ogni infrazione costituira un evidente abuso e comportera il risarcimento dei danni subiti. E'fatta riserva di tutti i diritti derivanti da brevetti o modelli.

Copying of this document and giving it to others and the use or communication of the contents thereof, are forbidden without express authority. Contravention of this restriction will constitute an evident abuse and result in a liability to the payment of damages. All rights are reserved in the event of the grant of patent or registration of a utility model or design. This document is the subject of copyright.

Toute Communication ou reproduction de ce document, toute exploitation ou communication de son contenu sont interdites, sauf autorisation expresse. Tout manquement a cette regle constitue un abus evident et expose son auteur au versement de dommages et interets. Tous droits de propriete industrielle reservies, notamment en matiere de brevets et de modeles.

Weitergabe sowie Vervielfaeltigung dieser Unterlage, Verwertung und Mitteilung ihres Inhalts nicht gestattet, soweit nicht ausdrueckliich zugestanden. Zuwiderhandlungen stellen einen offensichtlichen Missbrauch dar und verpflichten zu Schadenersatz. Alle Rechte fuer den Fall der Patenterteilung oder Gebrauchsmuster-Eintragung vorbehalten.

A	B	C	D	E	F	G	N	O	R
∅10	∅6	~10	Hex 17		~26			ISO8434-1-S	

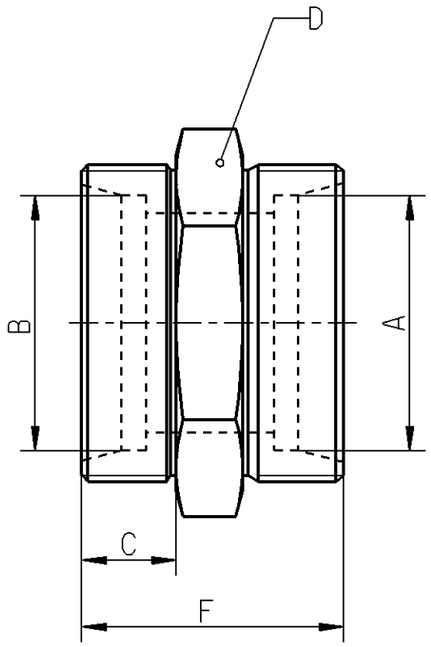

Material : Steel
Surface Protection : gal Zn CrVIfree

First production samples, samples from new or modified moulds or changes of every kind must be approved Engineering Department
Teile der ersten Produktion, Teile aus neuen oder geaenderten Formwerkzeugen oder Aenderungen jeglicher Art beduerfen der Genehmigung durch die Entwicklungsabteilung
Les premieres pieces de production, les pieces provenant de nouvaux moules ou de moules modifies, ou toutes autres modification, doivent etre approuvees par le departement des etudes
Campioni di inizio produzione, campioni ottenuti con stampi nuovi o modificati o con qualsiasi genere di mofica devono essere approvati dall'ufficio tecnico.

DCN-No.	Rev.	Date

State of Revision

General Specification: JED-334-0
Further Technical Data: 893 000 003 0
Doc. Code: 035 Sheet: To

General Tolerances JED-261

Class 1)	Range of Nominal Dimensions (± mm) ≤ 50	> 50 ≤ 180	> 180 ≤ 400	> 400	∡
Fine	0.5	1.0	1.5	2.0	±3°
Medium	1.0	2.0	3.0	4.0	
Coarse	2.0	3.5	5.0	6.5	

Tapped Holes acc.
1) Tolerance Class Applied Crossmarked

Copyright WABCO ®

	Date	Signature
Drawn	2008-03-10	Guerues
Checked	2008-04-25	Thiele
Expert	Thiele	

WABCO

Fitting
Verschraubung S
Raccord
Raccordo

Mass	Scale	Material No.	WABCO Id. No.: 8931005104		
0,021 KG	/	893 100 510 4	Doc.Code 005	Language ML	Sheet 1/1
Size A 3	TRI 002		Function Code	CAD System Pro/E	Prod.Type 0 1 X
			Replacement for		

100mm

drw: 8931005104___005 / Version: .0 / state: / mdl: 8939000344___A01