A	B	C	D	E	F	G	TORQUE
Ø15.1 (P5)	M22x1.5	MIN. Ø9.5	29.5	9	14.5	HEX. 28	40N

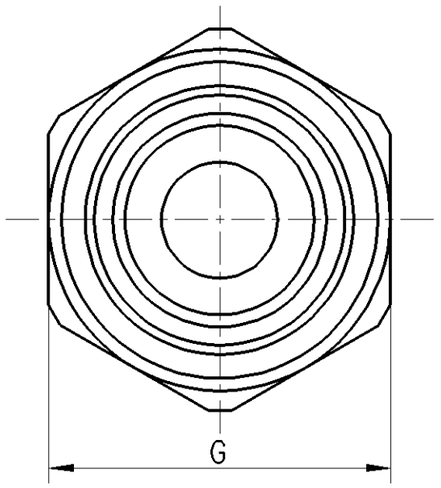

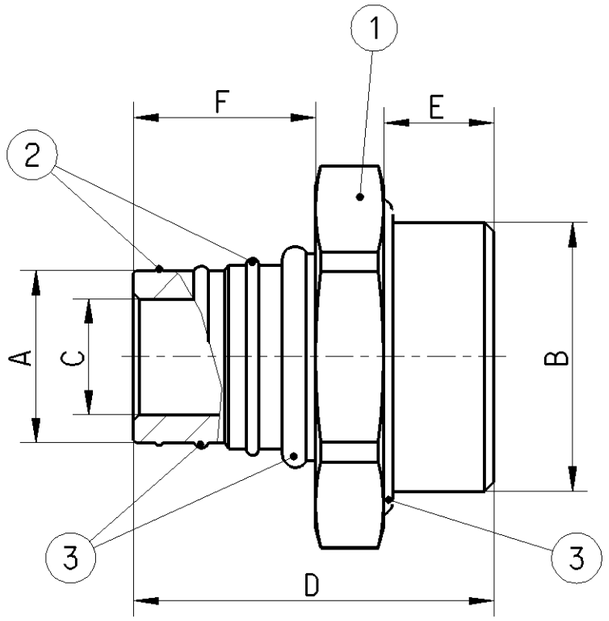

CLEANLINESS REQUIREMENT:

CLASS: K00 ACCORDING TO JED-593

AREA: FOR THE WHOLE PART (SPECIAL AGREEMENTS POSSIBLE, TO BE AGREED WITH PRODUCT ENGINEERING)

MATERIAL:

1. CuZn
2. STAINLESS STEEL
3. EPDM

1:1

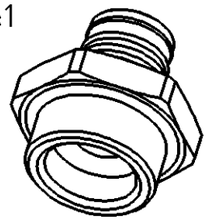

GENERAL SPECIFICATION : JED-762 ; JED-622 ; JED-271 ; JED-220

ENGINEERING RELATED AGREEMENTS WITH SUPPLIER HAVE TO BE MENTIONED IN THE "RELEASE OF SUPPLIER"

FOR USE IN APPLICATION IN COMPRESSED AIR SYSTEMS IN COMMERCIAL VEHICLES:

- WITH POLYAMID OR HYTREL TUBES ACC. TO: ISO7628; DIN74324, DIN73378
- WITH COMPRESSED AIR ACC.TO JED-848
- AT WORKING CONDITIONS (CONSIDER TUBE SPECIFICATION) :
  - -40°C ... 100°C (STORAGE 140°C MAX. 2h)
  - MAX. 1250kPa (12.5 bar)

General Specification: JED-334-1 , Size ISO 14405 LP

Further Technical Data:

Doc. Code: Sheet: To

General Tolerances

Class 1)		Range of Nominal Dimensions (± mm) ≤ 50	> 50 ≤ 180	> 180 ≤ 400	> 400	∢
Fine	X	0.5	1.0	1.5	2.0	±3°
Medium		1.0	2.0	3.0	4.0	
Coarse		2.0	3.5	5.0	6.5	

Tapped Holes acc. -

1) Tolerance Class Applied Crossmarked

Copyright WABCO®

	Date	Signature
Drawn	2014-10-15	Nerling
Checked	2014-10-15	Luechau
Expert	Kaufmann	

WABCO

Connector

Mass	Scale	Material No.	Date of first issue: 2014-10-15
0.048 KG	2:1 1:1	893 129 193 2	Doc.Code 005 / Language EN / Sheet 1/1
Size A 3	CAD System CREO	ECN-No. - / Revision - / Techn. Resp. 5790	Replacement for

100mm

Toute Communication ou reproduction de ce document, toute exploitation ou communication de son contenu sont interdites, sauf autorisation expresse. Tout manquement à cette règle constitue un abus évident et expose son auteur au versement de dommages et intérêts. Tous droits de propriété industrielle réservés, notamment en matière de brevets et de modèles.

Weitergabe sowie Vervielfältigung dieser Unterlage, Verwertung und Mitteilung ihres Inhalts nicht gestattet, soweit nicht ausdrücklich zugestanden. Zuwiderhandlungen stellen einen offensichtlichen Missbrauch dar und verpflichten zu Schadensersatz. Alle Rechte für den Fall der Patenterteilung oder Gebrauchsmuster-Eintragung vorbehalten.

Non è permesso consegnare a terzi o riprodurre questo documento, né utilizzarne il contenuto o renderlo comunque noto a terzi senza autorizzazione esplicita. Ogni infrazione costituirà un evidente abuso e comporterà il risarcimento dei danni subiti. E' fatta riserva di tutti i diritti derivanti da brevetti o modelli.

Copying of this document and giving it to others and the use or communication of the contents thereof, are forbidden without express authority. Contravention of this restriction will constitute an evident abuse and result in a liability to the payment of damages. All rights are reserved in the event of the grant of patent or registration of a utility model or design. This document is the subject of copyright.

drw: 893129193 / 005 / Version: -.3 / state: Under Review / mod: 131291932 ... A01